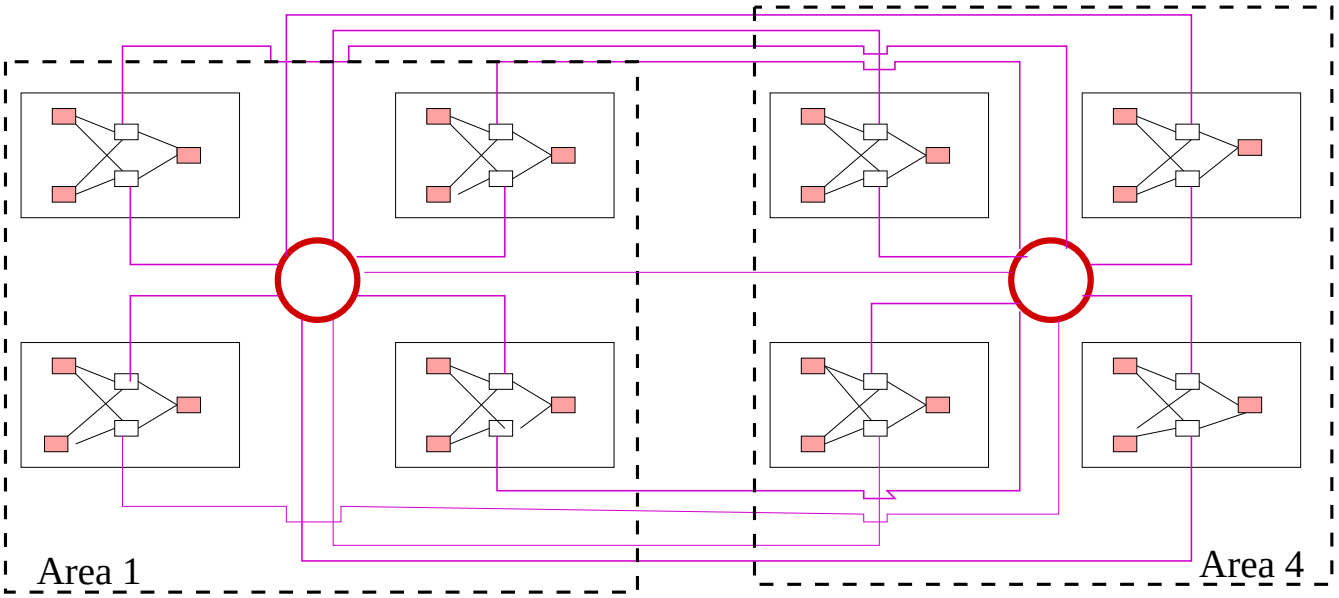

Area Border Router

Backbone Router

A T1 link connecting various routers in the Aera to its area border routers and for interconnection between areas

A T3 link connecting backbone routers with aera border routers

Router that has 2 hosts on it connected on FDDI ring

Router that has no hosts attachec to it.

T1 links interconnecting the route

Model that would be used for testing QOSPF