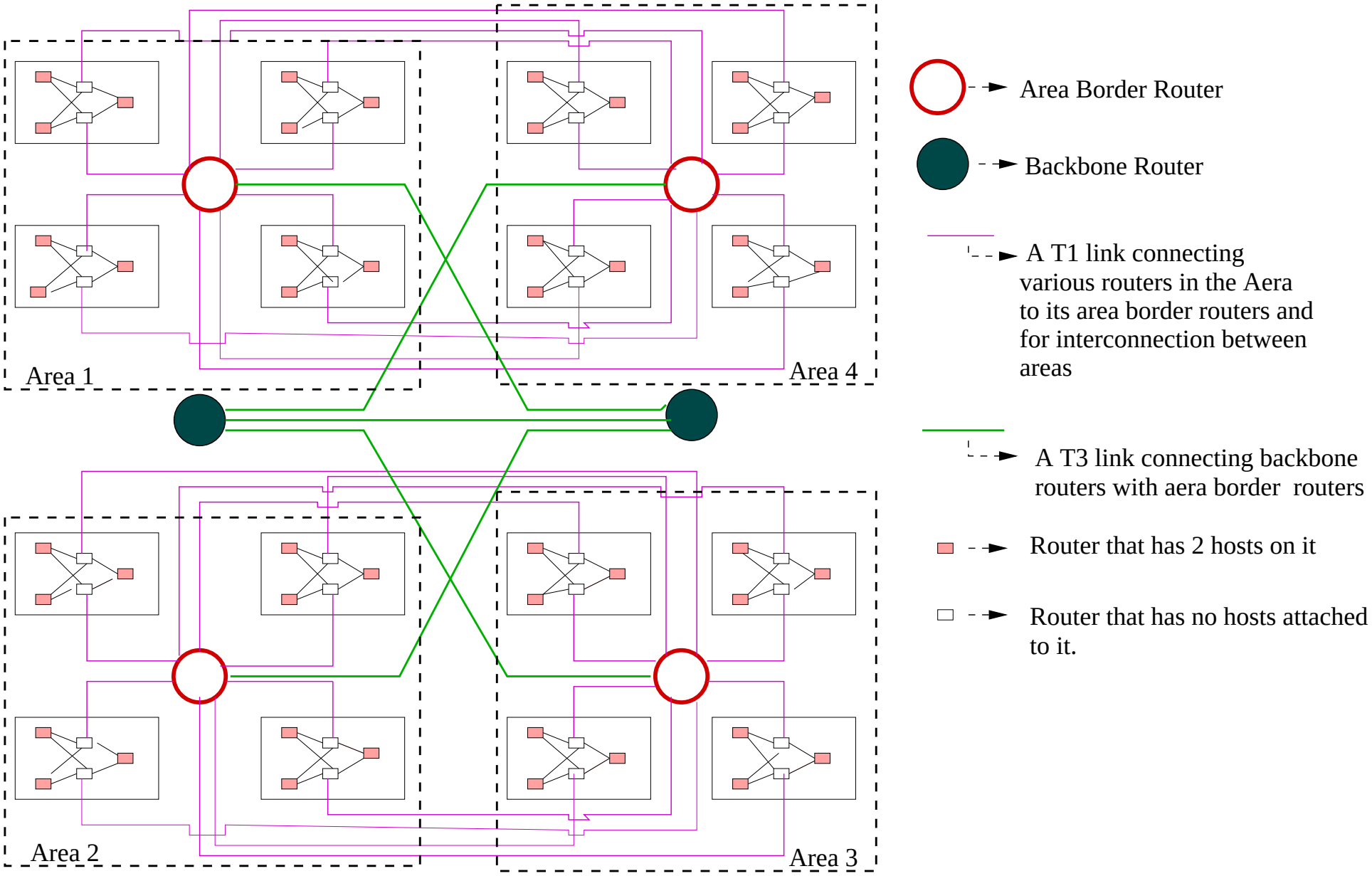

Model that would be used for testing QOSPF