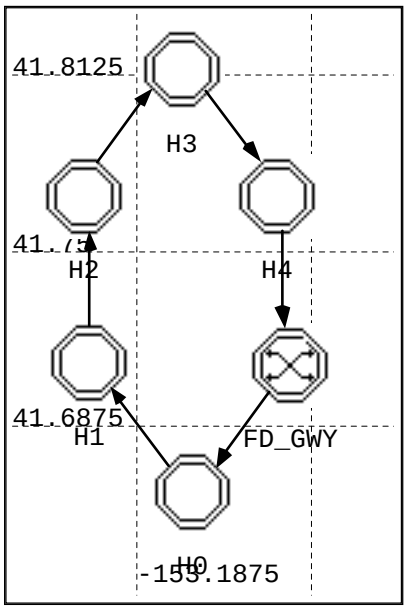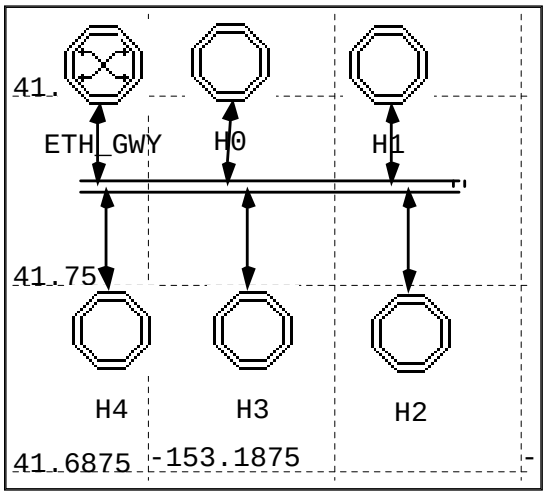Fig 6.2 FDDI ring and Ethernet