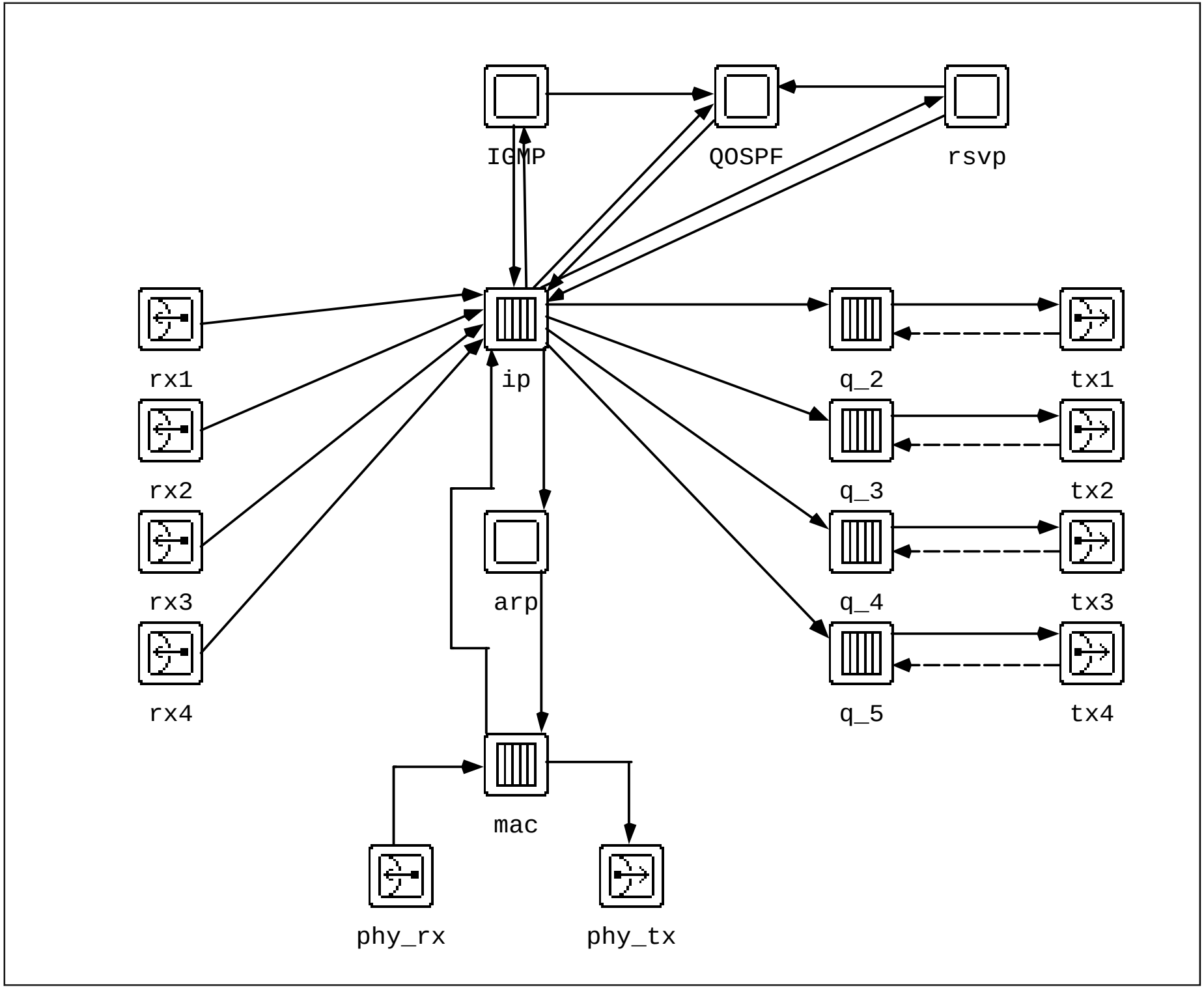

FDDI Gateway