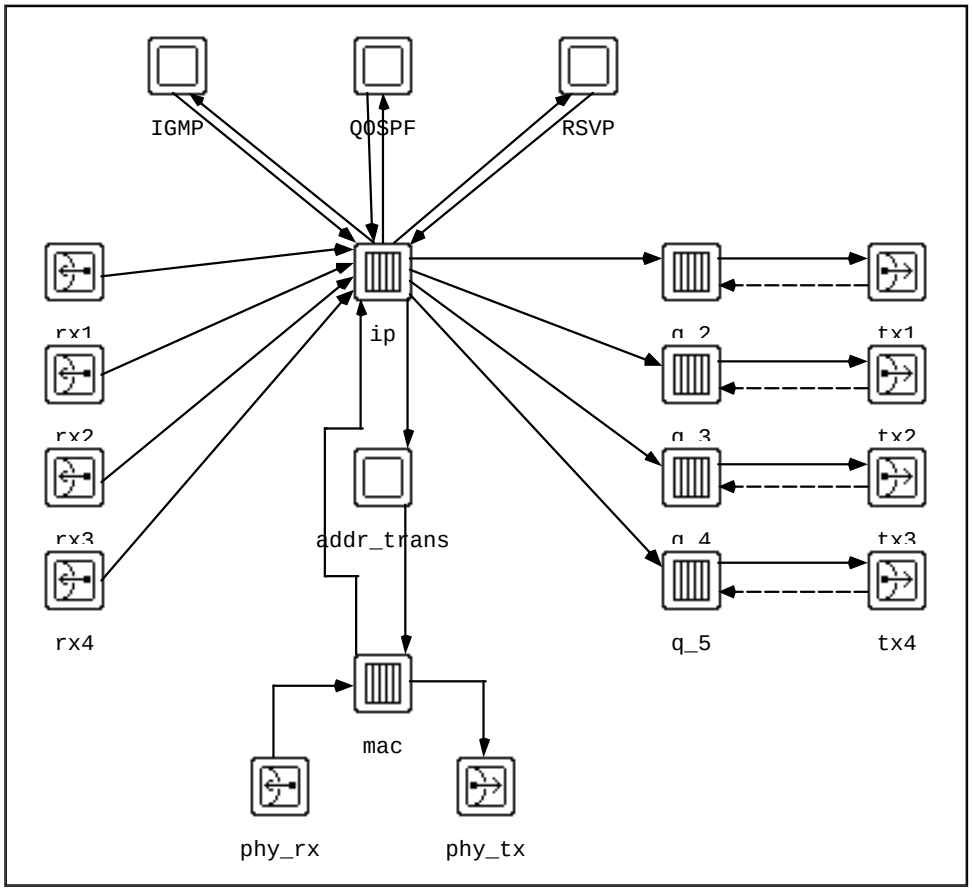Fig 6.5 Subnet router node level structure