# Technical and Operational Issues in Combining MSDL and C-BML Standards for C2-Simulation Interoperation in MSG-085

**Dr. J. Mark Pullen and Douglas Corner**
Center of Excellence in C4I
George Mason University
4400 University Drive
Fairfax, VA 22030, USA
Voice: (1) 703-993-3682
Fax: (1) 703-993-1706
{mpullen,dcorner}@c4i.gmu.edu

**Dr. Robert Wittman**
MITRE Corporation
3504 Lake Lynda Drive, Suite 410
Orlando, FL 32817
Voice: (1) 321-235-7601
Fax: (1) 407-208-1380
rwittman@mitre.org

**Adam Brook**
QinetiQ, Cody Technology Park
Ively Road, Farnborough, Hampshire GU14 0LX, UK
Voice: (44) 1252 396427
Fax: (44) 1252 392720
rabrook@QinetiQ.com

**Ole Martin Mevassvik and Anders Alstad**
Norwegian Defence Research Establishment, FFI
PO Box 25, NO-2027 Kjeller, Norway
Voice: (47) 6380 7423
Fax: (47) 6380 7115
{ole-martin.mevassvik, anders.alstad}@ffi.no

## *ABSTRACT*

*Smart Defense aims at building greater security with more collaboration and more coherence in financially challenging times by preserving and maintaining existing essential capabilities while developing, delivering, and deploying new capabilities in key areas. The work of NATO MSG-085 Standardization for C2-Simulation Interoperation addresses this approach directly in that it shows how to interoperate national legacy C2 and simulation systems. This paper reports on work to converge two critical standards in the context of MSG-085: the Military Scenario Definition Language (MSDL) and the Coalition battle Management Language (C-BML). These two standards have been developed independently since 2005, with the understanding that, for full effectiveness, they must operate together. This paper reports on an effort to achieve a basic level of compatibility between MSDL and C-BML in support of MSG-085. The purposes and states of development of MSDL and C-BML are described, followed by a discussion of issues that must be resolved for the two to work together harmoniously. The MSG-085 project's purposes and general approach are set forth, followed by a*

*description of work currently underway to use MSDL and C-BML together in that project, including software needed for supporting services. A particular area of concern addressed is the relationship between the Tactical Graphics of US MILSTD 2525C/NATO APP-6C used by MSDL and the JC3IEDM representation of units and control measures used in C-BML.*

# 1.0 OVERVIEW

The Simulation Interoperability Standards Organization (SISO) is the source of the Military Scenario Definition Language (MSDL) and the Coalition Battle Management Language (C-BML), which are key capabilities needed for NATO MSG-085 *Standardization for C2-Simulation Interoperation*. These two standards are in the process of converging to yield a powerful, standardized technical specification for command and control information systems (C2IS) to interoperate with simulation systems, a capability long sought to support a range of important military operations. This paper expands our earlier presentation in [26], describing developmental work leading to a capability MSG-085, *Standardization for C2-Simulation Interoperation*: an experimental operational environment where multiple national C2 and Simulation systems can interoperate, using MSDL and C-BML.

The sections which follow describe the areas where MSDL and C-BML must function together, including a summary of the technical and operational requirements of MSG-085 that drove the approach we are taking. Special attention is given to an area we have found to be problematic: the relationship between the Tactical Graphics of US MILSTD 2525C/NATO APP-6C that are used by MSDL and the JC3IEDM representation of units and control measures used in C-BML. We include a description of implementations that address those needs: a server environment assembled to provide support needed by MSG-085 in experimenting with operations using MSDL and C-BML, along with a description of client implementations in both C2 and simulation systems. The paper concludes with a summary of MSG-085 plans and a proposed path forward to full harmonization of these two SISO standards.

# 2.0 BACKGROUND OF MSDL AND C-BML

This section summarizes the history and status of these two standards.

## 2.1 MSDL

The Military Scenario Definition Language [24] grew out of a desire within the OneSAF Program to reduce scenario development time and cost, with the additional goal of being able to use the resulting scenario across multiple simulations, running within a federated environment or as independent simulations. The original concept was to create a separable, simulation-independent military scenario format, focusing on real-world military scenario aspects, using the industry standard data model definition eXtensible Markup Language (XML). Such a scenario could easily and dependably be consumed by current and evolving simulations. The concept was prototyped during the early development of OneSAF and then proposed for additional study to the larger international simulation community within a SISO Study Group (SG). That SG identified a community-wide need for a standardized military scenario format in order to reduce development time and cost and to enable sharing of re-usable scenario products. The result was seen as a way to automate the largely manual reproduction of a scenario into multiple simulation scenario formats and reduce the number of errors introduced during manual scenario development.

In response to the SG report, the formal SISO MSDL standard Product Development Group (PDG) was established in 2006 to produce a standard Military Scenario Definition Language data model. The PDG began by reviewing the MSDL specification provided by the OneSAF program and ultimately decided to refine its

data model by aligning it with the Joint Consultation, Command and Control Information Exchange Data Model (JC3IEDM); adding some elements such as weather information, and a scenario identification section leveraging the Base Object Model Identification schema; and removing elements that were under study or standards development such as the Course of Action structure that was equivalent to the work being pursued under the SISO C-BML PDG.

The MSDL PDG culminated in November of 2008 with a formal SISO approved Version 1.0 MSDL specification and XML Schema set. The PDG continues to meet regularly and plans to integrate the MSDL specification with the C-BML standard upon its completion. Use of MSDL has continued to expand through additional US and international community involvement and investments by the US Army Modeling and Simulation Office (AMSO), Air Force, Marine Corps as well as NATO activities including Spain, France, the United Kingdom, Norway, Germany, Canada, and others.

### 2.2 C-BML

Battle Management Language (BML) and its various proposed extensions are intended to facilitate interoperation among C2IS and modelling and simulation (M&S) systems by providing a common, agreed-to format for the exchange of information such as orders and reports. In recent implementations, this has been accomplished by providing a repository service that the participating systems can use to post and retrieve messages expressed in BML. The service is implemented as middleware that is essential to the operation of BML and can be either centralized or distributed. Recent implementations have focused on use of Extensible Markup Language (XML) along with Web Service (WS) technology, a choice that is consistent with the Network Centric Operations strategy currently being adopted by the US Department of Defense and its coalition allies [1,2].

SISO's BML study group created a plan to develop a Coalition BML (abbreviated C-BML) standard in 2005 [3] and the corresponding PDG was chartered in 2007. Progress has been slow, for reasons documented in [4]. However, the C-BML Phase 1 Draft Standard reached the point of Trial Use in 2011 and is expected to be balloted in 2012. The approach has generally followed the Lexical Grammar approach introduced by Schade and Hieb [5,6]. Informing the standardization process have been multiple projects under various US DoD sponsors [7,9,11] and an ongoing sequence of experimental BML configurations developed and demonstrated by the members of NATO MSG-048 and MSG-085 [8,10,12,13,14,15] (see section 4).

## 3.0 ALIGNMENT OF MSDL AND C-BML

There are three areas in MSDL and C-BML that need to be aligned for efficient combined use of the two standards: task organization, tasks and tactical graphics. These three areas and status of their current representations are described below.

### 3.1 Task Organization Definition

Various ongoing projects, including SISO C-BML development, have independently derived formats for the friendly and adversary order of battle (ORBAT), also called Task Organization in military orders. The primary requirements are (1) identify the name and type of each unit (including its US MIL STD 2525C icon or NATO APP-6C; (2) identify command relationships (parent and child). MSDL has standardized an XML document structure for this purpose, which has been used successfully by multiple national teams in MSG-085. The C-BML Phase 1 schema draft contains only composite definitions (including Task, but no Task Organization); no full Order or Report is in the normative specification.

## 3.2 Tasking Definition

The definition of actions to be carried out, their interrelations, and the control measures to be employed, is the basic reason for existence of C-BML. The MSDL standard includes a placeholder for an initial tasking which has not been developed in detail; it has no provision for a continuing flow of orders, or for reports. By contrast, C-BML has a Trial Use draft with tasking elements that supports both initial and subsequent orders, and it also provides for reports from simulations (and potentially also from humans), providing situational awareness information to be made available to C2 systems. This draft is based on experience developed in NATO MSG-048, *Coalition Battle Management Language*, the precursor to MSG-085.

## 3.3 Tactical graphics

Both MSDL and C-BML have data structures to support point, line, and area tactical graphic as provided in US MIL STD 2525C and NATO APP 6C. These tactical graphic data structures allow consistent sharing of a wide range of military operational concepts including but not limited to: organizational boundaries; obstacles; movement routes and corridors; no-fire areas; facilities and buildings of particular significance such hospitals, government and/or religious centers; locations where hostile or terrorist actions have taken place such as an IED attack; etc.

While the concepts for the tactical graphics within MSDL and C-BML are consistent, the specific data structures within MSDL and C-BML are different. Although this adds effort during implementation to support multiple data structures the mappings between the MSDL and C-BML are straightforward. As described later in this paper, cross-referencing using the unique identifiers for the tactical graphics or unit/platform definitions allows elements to be specified within an MSDL document at initialization and referenced within a C-BML document at initialization time or within a C-BML phrase during run-time.

## 3.4 Requirements for combined use of MSDL and C-BML

Currently, members of both the MSDL and C-BML PDGs are experimenting with ways to reference C-BML instance documents at initialization time within MSDL documents so that plans and orders can be provided and are consistent with the task organizations and tactical graphics as defined within a MSDL document. Our work in MSG-085 is intended to provide practical experience supporting that process.

The alignment of the standards should take into consideration that C-BML is designed to support tasking and reporting (C2), while MSDL targets simulation initialization in general.

For convergence, C-BML and MSDL both need to have a common way of referencing and defining elements in the task organization. MSDL is primarily used to define the organization elements utilized in a scenario, while C-BML usually is used to tailor different organization structures to the needs of a particular set of tasks.

For example, in Course of Action Analysis (COAA) the task organization is an integral part of the plan and the impact of variations in the task organization may be analyzed. In other use cases, the task organization might come from an external source with respect to the C2IS. One example could be Command and Staff Training, where the task organization is developed by the exercise planners.

The task organization may be dynamic throughout an operation as a result of attachments and detachments of units. These changes will normally be issued using a Fragmentary Order (FRAGO). This also may be reflected in MSDL when storing snapshots of a running scenario.

MSDL and C-BML both should allow defining the task organization from aggregated units to specific equipment. Currently MSDL only provides for describing the general categories for units and type string for equipment, e.g. “main battle tank” for units and “M1A1 Abrams” for equipment type. Especially for coalition

interoperability, where a range of different equipment is being used, constructs are needed to describe specific unit and equipment types. This requirement is also present in C-BML reports where units might be recognized at different levels of detail, from general unit type down to specific equipment. On the other hand MSDL must allow extensions in order to provide custom initialization data for units and equipment as needed by specific simulation systems.

While neither MIL STD 2525C nor JC3IEDM has predefined unit equipment enumerations, the JC3IEDM allows for specific types to be defined and shared dynamically within a federation of systems.

From the above it is apparent that that alignment of MSDL and C-BML must provide for information to be interchangeable while allowing flexibility, based on a common way of referencing and defining elements in the task organization.

A general referencing approach is under investigation that addresses the needs of both the MSDL and C-BML as recognized by their Product Development Groups. This approach is being evaluated in individual simulation federates (e.g., OneSAF) and also in coalition-based federations within MSG-085. The concept is for organizations and equipment as well as tactical graphics that are initially defined within MSDL to be referenced by their unique identifiers within C-BML instance documents used for initialization (planned execution) and follow-on (orders, commonly referred to as FRAGOs, task, requests, and reports). The MSDL instance document available for initialization will provide reference by document/file names to any associated C-BML instance document necessary for initialization. Initial results show this referencing relationship has utility in providing a general approach to supporting multiple plans (C-BML documents) for a single MSDL scenario and allows the C-BML orders to reference and leverage tactical graphics established and distributed during initialization within the MSDL document.

## 4.0 MSG-085 AND ITS REQUIREMENTS

Technical feasibility of coalition BML was demonstrated by NATO MSG-048 in a Technical Activity conducted 2006-2009. The basic architecture for C2-simulation operations was developed by MSG-048, as described in [8,10,12,20,21]. The final experimentation event of MSG-048 involved six national C2 systems, five national simulations, and two supporting software systems, as shown in Figure 4.1.

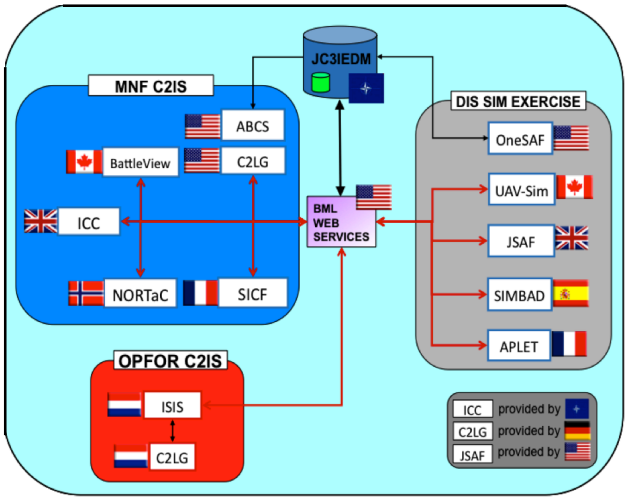


**Figure 4.1: MSG-048 Experimentation Architecture**

The follow-on Technical Activity, MSG-085, is chartered to demonstrate and facilitate the operational utility of MSDL and C-BML in military coalitions. MSG-085 had its initial organizing meetings in 2010, resulting in an Operational Subgroup (OSG) that is defining validation experiments and a Technical Subgroup (TSG) that is assembling required C2 and simulation systems and necessary infrastructure. The authors are participants in the TSG and participated in a demonstration of the initial infrastructure, held at the Interservice/Industry Training, Simulation and Education Conference (I/ITSEC) 2011. The demonstration was conducted over the Internet, with participating sites in Norway, England, Virginia, and Florida. Some of the participating systems are described below as examples of MSDL and C-BML implementation.

# 5.0 COALITION SERVER IMPLEMENTATION

The George Mason University (GMU) C4I Center, under management of US Army PM OneSAF and in close cooperation with MITRE and QinetiQ personnel, has developed a set of services that provide infrastructure to support implementation of MSDL/C-BML in MSG-085 C2 and simulation systems. This section describes the general scripted server capability and how it has been enhanced to provide infrastructural needs for aggregating MSDL files, storing and publishing C-BML orders and reports, and coordinating operation of multiple C2 and simulation systems. The top-level architecture of a C2-simulation coalition using these services is shown in Figure 5.1. These implementations are available at http://c4i.gmu.edu/OpenBML as open source software. They include the server capabilities described in 5.1 and 5.2 below and also an open-source coalition Status Monitor and Control, which is described in [27].

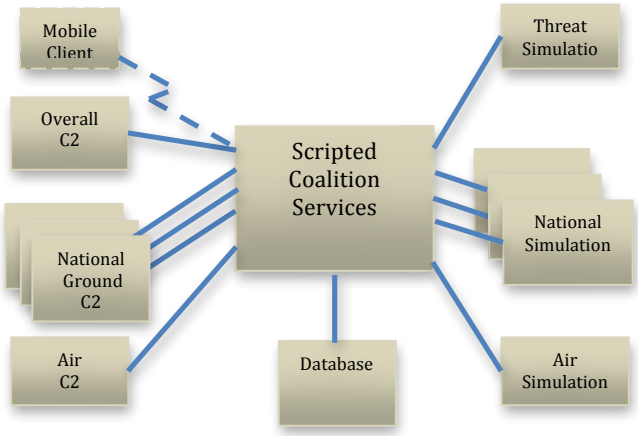


**Figure 5.1: Overall Client-Server Architecture**

## 5.1 Scripted Server

Experience to date in development of BML indicates that the language will continue to grow and change. This is likely to be true of both the BML itself and of the underlying database representation used to implement the server capability. However, it also has become clear that some aspects of BML middleware are likely to remain the same for a considerable time: namely, the XML input structure and the need for a repository server to store a representation of BML in a well-structured relational database, accessed via the Structured Query Language (SQL). This implies an opportunity for a re-usable system component: a scripted server that can convert between a relational database and XML documents based on a set of mapping files and XML Schema files. The GMU C4I Center scripted server, named "SBMLServer," accepts *push* and *pull* transactions (BML/MSDL XML documents) and processes them according to a script (or mapping file, also written in XML). While the scripted approach may have lower performance when compared to hard-coded

implementations, it has several advantages:

- new BML constructs can be implemented and tested rapidly
- changes to the data model that underlies the database can be implemented and tested rapidly
- the ability to change the service rapidly reduces cost and facilitates prototyping
- the script provides a concise definition of BML-to-data model mappings that facilitates review and interchange needed for collaboration and standardization

The heart of SBMLServer is a scripting engine, introduced in [16], that implements a BML WS by converting BML data into a database representation and also retrieving from the database and generating BML as output. SBMLServer could be scripted to work with any XML-based input and any relational database. Current scripts implement the Joint Command, Control and Consultation Information Exchange Data Model (JC3IEDM). However, any logically consistent and complete data model could replace JC3IEDM. Further, we have developed a Consolidated Scripting Language (CSL) that represents the scripting information in a concise, practical format. The architecture of the server system is shown in Figure 5.2. The system also supports publish/subscribe operation, necessary for scalable use of Web services in complex environments such as that shown in Figure 5.1.

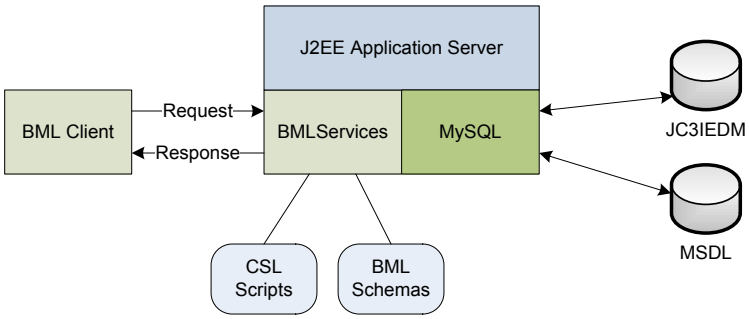


**Figure 5.2: Scripted BML Server Architecture**

MSG-085 has made new demands on the SBMLServer. Because national groups have implemented various "dialects" of BML, developed at different times, there is a need to interoperate different schemas. Because the SBMLServer maintains XML documents in a common database representation (JC3IEDM), it is possible to push in orders and reports from one version and pull the information out under a different schema. This capability is already functional and is expected to provide significant flexibility to MSG-085 as it pursues its program of work. SBMLServer also implements the XML Path Language (XPATH) (see http://www.w3.org/TR/xpath), wherever a relative path in the XML input is required, and both SOAP and RESTful interfaces.

## 5.2 Adapting SBMLServer to Support MSDL

When multiple systems participate in a coalition, it is necessary to merge their MSDL files. Some parts of the merge process consist simply of concatenation, but other parts require functions such as the largest of a group or the total count. With a simple addition to SBMLServer, we were able to implement the required logic in CSL scripts. The various clients push their MSDL documents into the SBMLServer, and the XML structure is validated during this process. At any time, any client can pull an aggregated MSDL document for the whole coalition assembled up to that time. Upon signal from the master controller, via the Status Monitor and Control service described section 4.4 below, the SBMLServer publishes the aggregated MSDL document to all participating C2 and simulation systems. Information from the aggregated MDSL file also is used to initialize the units and control features in the SBMLServer database. If the MSDL documents of the client systems are extracted automatically, this assures that all participating systems have available globally correct

initial information.

The MSDL scenario is the element that binds together the components to be used for a particular exercise. Once the scenario has been initialized and the signal given by the master controller participating organizations may add additional components to the scenario. These include MSDL scenario elements Geographic Region of Interest, Force/Sides, Units, Equipment, Installations, Overlays and Graphics. Transactions are edited as they are received to insure correct format, unique unit and equipment names and object handles, and valid references between components.

Once all organizations have submitted their data and signalled their status to the master controller, the master controller will submit a publish transaction for the scenario being used. This will cause the transmission of the full MSDL XML data to all subscribers to the MSDL topic, and may be repeated by the human Master Controller. Clients not using the publish/subscribe service can alternatively execute a query and retrieve the same information. This query may also be used by organizations joining the exercise after the MSDL data has been published.

All the elements submitted by clients under a single scenario are aggregated into a single MSDL document. It is assumed that clients have submitted complete components: Units, Equipment Items, Installations, Overlays and Graphics. The aggregated MSDL document will then consist of the data entered during initialization and the complete components entered by the individual transactions submitted by the clients.

New units and equipment may be discovered after the exercise has started. These generally will be enemy units or equipment. In this case an update will be published on the MSDL topic detailing the newly discovered unit or equipment item. An overview of MSDL aggregation is shown in Figure 5.3.

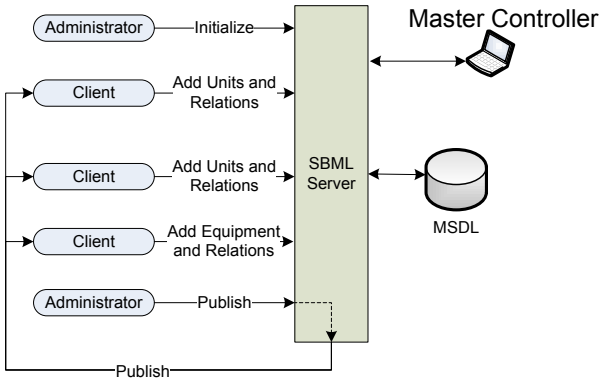


**Figure 5.3: MSDL Server Operation**

## 6.0 MSDL/C-BML CLIENT IMPLEMENTATIONS

Some of the C2 and simulation systems to be used by MSG-085 already have early BML implementations. However, only OneSAF had an MSDL implementation as of Spring 2011. This section describes how MSDL was implemented by QinetiQ in the ICC and JADOCS C2 systems and the JSAF simulation system, how an MSDL export capability in NORTaC-C2IS was developed by FFI and how MITRE updated C-BML in the OneSAF simulation system.

Figure 6.1 shows the top-level system architecture implemented at I/ITSEC in 2011 for MSG-085 Demonstration Harness 1. This system, which was distributed across four sites, was coordinated using the GMU status service described above.

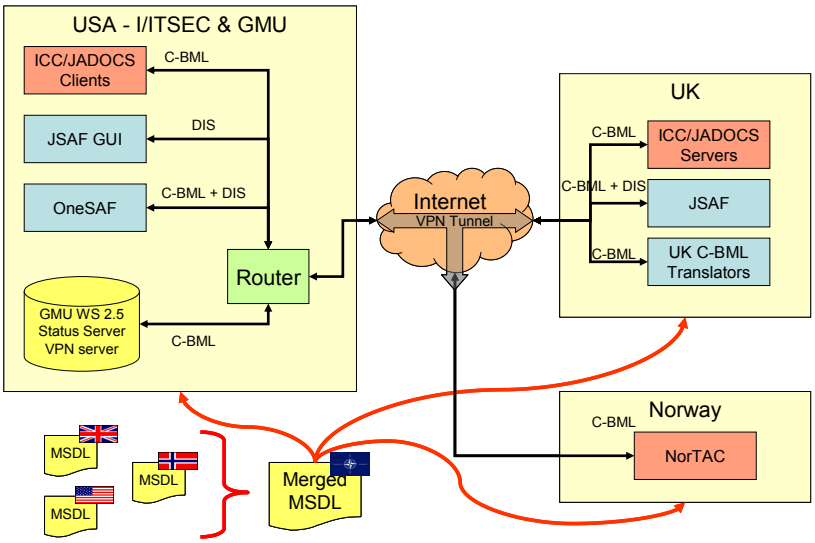


**Figure 6.1: System Architecture for 2011 I/ITSEC MSDL/C-BML Demonstration Harness 1**

## 6.1 ICC/JADOCS

The NATO Integrated Command and Control system (ICC) and the Joint Automated Deep Operation Coordination System (JADOCS) were used as command and control applications during the demonstration. Both of these systems are networked, server/client, database applications. While neither has a native capability for processing either C-BML or MSDL, both had been used with previous C-BML experimentation and were able to display C-BML reports through the use of existing translator applications. Air Tasking Orders (ATOs) and Airspace Control Orders (ACOs) prepared in ICC were used to generate C-BML air tasks. The C-BML translators were updated to be compatible with the latest version of the SBML server.

Use of MSDL has been investigated to see how easily it is possible to populate and represent the internal databases used by C2 systems. This is a new use for MSDL, which has until now been used primarily to initialize simulations. It is now possible to translate both ways between MSDL TaskOrgs and the JADOCS Friendly Order of Battle (FOB) database. The corresponding translation capability for ICC has not yet been implemented but this is not considered to be a very difficult activity. Future developments will address the exchange of MSDL tactical graphics with these C2 applications.

The ICC ATO and ACO databases are interrogated to populate C-BML orders with air tasks, which are then published through the SBMLServer web services and subscribed to and consumed by the relevant simulation systems. Neither ICC nor JADOCS uses a JC3IEDM database, which leads to interesting mapping problems with C-BML as it stands, e.g. numerous air task definitions are not represented in JC3IEDM.

## 6.2 JSAF

JSAF is an entity-level constructive simulation, which has been used in MSG-085 on several occasions. C-BML orders and reports are processed using a federated interface application.

A new two-way MSDL interface has been produced, which permits correctly located TaskOrgs to be created from JSAF scenario files and *vice versa*. This therefore allows MSDL to be used for both initialization and checkpointing, while remaining consistent with other systems in the C-BML environment.

The JSAF C-BML interface declares newly discovered units (found by JSAF sensor models) and publishes MSDL "snippets" to support the representation of perceived truth in the C-BML system. Publishing these updates also allows the SBML JC3IEDM data-base to maintain a full representation of the developing battle-space. Once new units have been processed by the web services they are then available to any participating system and to any late joining system. For example, some legacy C2 systems (although none of those used in the demonstration system) need to identify newly discovered units and MSDL provides a means to achieve this.

Some of the main considerations relate to using MSDL with JSAF:

- The first relates to mapping MSDL unit and equipment types, which are defined by MIL STD 2525C Symbol ID (SID) codes into corresponding units and entities within JSAF. This has been achieved using pre-defined mappings between SID codes and known JSAF unit and entity compositions. This mapping process needs to be able to take into account as much information as possible from the SID codes such as country codes and the associated MSDL Force/Side relationship.
- There is a requirement to truncate TaskOrg structures because although JSAF can create complex multi-level echelons its tasking process requires simpler, branch end echelon structures, e.g companies and platoons in the land domain. It is not sufficient to remove unwanted ancestor units, since in MSDL sub-units inherit characteristics from their parents.
- There is a requirement for different applications to be able to ingest their own sub-sets of MSDL, which requires some degree of MSDL post-processing.
- Finally, although multiple Force/Sides are valid in MSDL they must map to/from a simple four-side (Friendly/Hostile/Neutral/Unknown) capability in JSAF.

## 6.3 NORTaC-C2IS

The Norwegian Tactical Command and Control Information System (NORTaC-C2IS) is a product developed by Kongsberg Defence Systems (KDS) for the Norwegian Army. In 2008, FFI developed the FFI C2-gateway which provides C-BML capabilities for NORTaC-C2IS for use in NATO MSG-048 experiments [13]. The gateway uses the JC3IEDM compliant database in NORTaC-C2IS to extract C-BML orders and to insert C-BML reports. Exchange of C-BML documents are done through communication with the SBMLServer.

For the 2011 demonstration, FFI extended the FFI C2-gateway with a MSDL export capability in order to participate in simulation initialization through the SBMLServer. This new capability extracts the task organization for the Norwegian forces from the NORTaC-C2IS database and creates an MSDL document. During the demonstration this capability was used to initialize JSAF with the Norwegian units. JSAF subsequently simulated a BML order developed in NORTaC-C2IS tasking the same units. Figure 6.2 shows a reconnaissance task in NORTaC-C2IS.

NORTaC-C2IS has functionality for defining overlays where units and tactical graphics can be positioned. The FFI C2-gateway allows the user to generate MSDL by selecting such an overlay (i.e. a JC3IEDM "context"). The current MSDL capability only extracts the static task organization and for each unit/equipment adds the position if it is defined in the selected overlay. At present the gateway only supports the MSDL sections Forces/Sides, Units and Equipment.

While extracting the task organization from JC3IEDM was relatively easy, the mapping from the JC3IEDM type-structure to MSDL compliant symbol IDs was complicated. The mapping was partly implemented by utilizing existing NORTaC-C2IS mapping files and partly by using mapping rules found in [25].

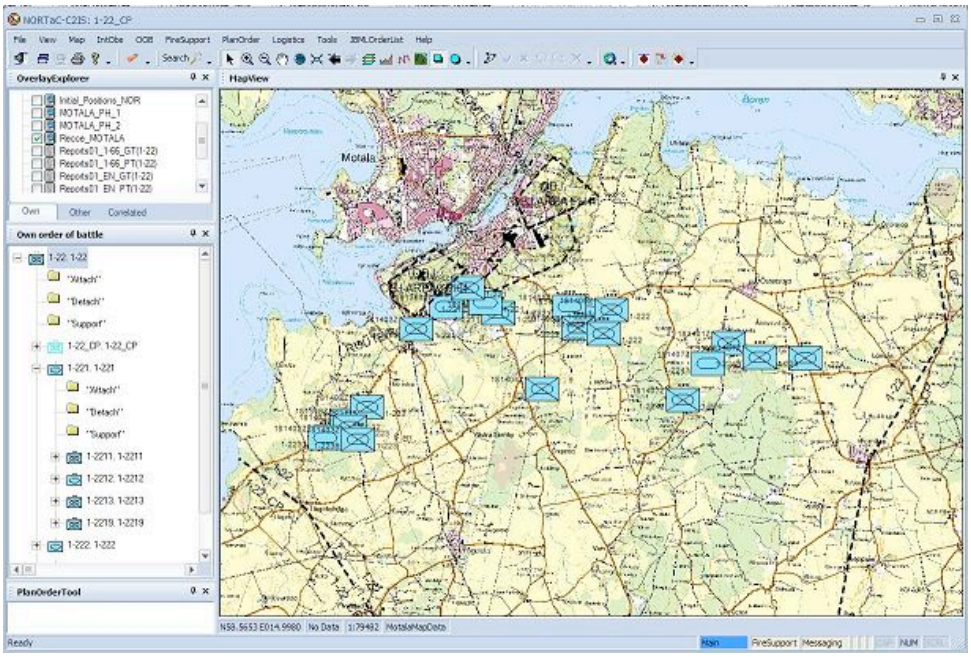


**Figure 6.2: Reconnaissance task in NORTaC-C2IS**

## 6.4 OneSAF

The USA Army Modeling and Simulation Office funded a MITRE effort to integrate MSDL and C-BML data models into a working OneSAF solution. OneSAF is an entity-level simulation developed by the Program Executive Office for Simulation Training and Instrumentation (PEO STRI) and used across the US Army for analysis, experimentation, testing, and training. OneSAF is under active evolutionary DoD and government open-source development (available under USA Foreign Military Sales) and is delivered as a simulation toolkit that can be tailored by end-users for their specific purposes.

To support an integrated MSDL and C-BML OneSAF capability, a number of enhancements to OneSAF Version 5.1.1 were required. These enhancements provide OneSAF with an implementation that fully complies with the MSDL standard while allowing for local extensions and support the C-BML draft standard now in balloting. Finally, the effort provided a OneSAF import and export for a limited set of the Full and Light data elements associated with the C-BML standard. A summary of the enhancements follows:

- Enhanced MSDL document validation and 2525B symbol code use for unit/platform type and associated echelon;
- Enhanced capability to map 2525B symbol code information to a specific OneSAF unit/entity composition and then persist and reference the mapped unit/platform in subsequent MSDL imports.
- New capability to import Full and Light C-BML orders “move”, “attack”, etc and post to the OneSAF Mission Editor as orders to OneSAF units and/or platforms;
- New capability to export orders from the OneSAF Mission Editor to C-BML Full and Light phrases.

- New capability to connect to the web-based coalition-monitor tool provided by George Mason University; and
- New capability to send and receive MSDL and C-BML documents from the Coalition Battle Management Services server and the Scripted Battle Management Language Service server.

Although there is more work to be done for OneSAF, this effort has demonstrated the value of being able to share standardized scenario and order-based in a WS environment between different and multi-national simulations and Mission Command devices.

# 7.0 THE WAY FORWARD

We conclude with summaries of the expected way forward for MSG-085 and for SISO MSDL and C-BML.

## 7.1 MSG-085 Planned Activities

MSG-085 is actively engaged in developing both scenarios and use cases for military operations (training and mission support) using MSDL/C-BML C2-simulation interoperation. In addition to the systems described in this paper, other national systems from France, Spain, and the USA were demonstrated at I/ITSEC 2011. Further, a set of French-German experiments to interoperate national C2 systems and simulations, using MSDL and the version of BML used by MSG-048, are reported in [23].

MSG-085 is planning an experimentation event in 2012, leading up to participation in a major event in 2013 or 2014 that can validate the conclusions with regard to the expected operational utility of C2-simulation interoperation using MSDL and C-BML.

## 7.2 MSDL/C-BML Convergence

The ongoing work of the MSDL and C-BML Product Development groups affords ample opportunity for these standards to achieve full compatibility, in compliance with both the SISO Standards Activity Council (SAC) guidance and common sense. Both MSDL and C-BML need to have a common way of referencing and defining elements in the task organization and tactical graphics.

The use of MSDL has gone a long way to solve the initialization problems that were identified in the earlier work of MSG-048. It is now possible to ensure that there is consistency of representation across all systems. However, the processes that are required to use this information now need to be understood and developed. For example, JSAF requires entity (or equipment) information, which may not be required, and hence not be present, in the C2IS which is being used to prepare the C-BML orders. This means that processes are needed to manage this information, perhaps inferring it using a rule system or creating it manually through an MSDL editor such as MSDE. Similarly, JSAF does not require all the higher unit echelons that are present in the MSDL TaskOrg, so these too have to be subject to a filtering process.

## 7.3 Conclusions

Work in C2-simulation interoperation, using emerging SISO standards, continues to make progress, as described in this and companion papers. Practical implementation by MSG-085 team members is leading to understanding of how military operations can be supported effectively by this technology. National implementations in both C2 and simulation systems, coupled with supporting open source server software, make the feasibility of this approach clear. This work has two commendable results: the interoperating systems will support operational experimentation now being planned by MSG-085, and also will continue to provide the experience needed for SISO MSDL and C-BML product development groups to produce usable standards, based on technical approaches that have been demonstrated to be effective.

## REFERENCES

[1] Carey, S., M. Kleiner, M. Hieb, and R. Brown, "Standardizing Battle Management Language – A Vital Move Towards the Army Transformation," IEEE Fall Simulation Interoperability Workshop, Orlando, FL, 2001

[2] Sudnikovich, W., J. Pullen, M. Kleiner, and S. Carey, "Extensible Battle Management Language as a Transformation Enabler," in *SIMULATION,* 80:669-680, 2004

[3] Blais, C., K. Galvin and M. Hieb, "Coalition Battle Management Language (C-BML) Study Group Report," IEEE Fall Simulation Interoperability Workshop, Orlando FL, 2005

[4] Abbott, J., J. Pullen and S. Levine, "Answering the Question: Why a BML Standard Has Taken So Long to Be Established?" IEEE Fall Simulation Interoperability Workshop, Orlando FL, 2011

[5] Schade, U. and Hieb, M., "Formalizing Battle Management Language: A Grammar for Specifying Orders," *2006 Spring Simulation Interoperability Workshop*, IEEE Spring Simulation Interoperability Workshop, Huntsville, AL, 2006

[6] Hieb, M. and U. Schade, "Formalizing Command Intent Through Development of a Command and Control Grammar," 12th International Command and Control Research and Technology Symposium, Newport, RI, 2007

[7] Perme, D., M. Hieb, J. Pullen, W. Sudnikovich, and A. Tolk, "Integrating Air and Ground Operations within a Common Battle Management Language," IEEE Fall Simulation Interoperability Workshop, Orlando, FL, 2005

[8] Sudnikovich, W., A. Ritchie, P. de Champs, M. Hieb, and J. Pullen, "NATO Exploratory Team – 016 Integration Lessons Learned for C2IEDM and C-BML," IEEE Spring Simulation Interoperability Workshop, San Diego CA, 2006

[9] Hieb, M., S. Mackay, M. Powers, M. Kleiner, and J. Pullen, "The Environment in Network Centric Operations: A Framework for Command and Control," 12th International Command and Control Research and Technology Symposium, Newport, RI, 2007

[10] Galvin, K., W. Sudnikovich, P. deChamps, M. Hieb, J. Pullen, and L. Khimeche, "Delivering C2 to M&S Interoperability for NATO - Demonstrating Coalition Battle Management Language (C-BML) and the Way Ahead," IEEE Fall Simulation Interoperability Workshop, September 2006

[11] Pullen, J., M. Hieb, S. Levine, A. Tolk, and C. Blais, "Joint Battle Management Language (JBML) - US Contribution to the C-BML PDG and NATO MSG-048 TA," IEEE European Simulation Interoperability Workshop, June 2007

[12] Pullen, J. *et al.*, NATO MSG-048 Coalition Battle Management Initial Demonstration Lessons Learned and Way Forward, IEEE Spring Simulation Interoperability Workshop, Providence, RI, 2008

[13] de Reus, N., R. de Krom, O. Mevassvik, A. Alstad, U. Schade and M. Frey, "BML-enabling national C2 systems for coupling to Simulation," IEEE Spring Simulation Interoperability Workshop, Newport, RI, 2008

[14] Gustavsson, P., M.R. Hieb, M. Groenkvist, V. Kamath, Jakob Blomberg, and Joakim Wemmergard. "BLACK-CACTUS – Towards an Agile Joint/Coalition Embedded C2 Training Environment," IEEE Spring Simulation Interoperability Workshop, Providence, RI, 2008

[15] Levine, S., L. Topor, T. Troccola, and J. Pullen, "A Practical Example of the Integration of Simulations, Battle Command, and Modern Technology," IEEE European Simulation Interoperability Workshop, Istanbul, Turkey, 2009

[16] Pullen, J., D. Corner and S. Singapogu, "Scripted Battle Management Language Web Service Version 1.0: Operation and Mapping Description Language," IEEE Spring 2009 Simulation Interoperability Workshop, San Diego CA, 2009

[17] Pullen, J. and K. Heffner, Supporting Coalition Battle Management Language Experiments with Scripted Web Services, NATO 2009 Modeling and Simulation Symposium, Brussels, Belgium, 2009

[18] Corner, D. J. Pullen, S. Singapogu, and B. Bulusu, "Adding Publish/Subscribe to the Scripted Battle Management Language Web Service," IEEE Spring 2010 Simulation Interoperability Workshop, Orlando, FL, 2010

[19] Pullen, J., D. Corner, S. Singapogu, B. Bulusu, and M. Ababneh, "Implementing a Condensed Scripting Language in the Scripted Battle Management Language Web Service," SCS/SISO Euro-Simulation Interoperability Workshop, Ottawa, Canada, 2010

[20] Pullen, J. *et al.*, "An Expanded C2-Simulation Experimental Environment Based on BML," IEEE Spring Simulation Interoperability Workshop, Orlando, FL, 2010

[21] Heffner, K. *et al.*, "NATO MSG-048 C-BML Final Report Summary," IEEE Fall 2010 Simulation Interoperability Workshop, Orlando, FL, 2010

[22] Nicklas, L., J. Pullen, and D. Corner, Dynamic Publish/Subscribe Topics in the Scripted BML Server, IEEE Spring Simulation Interoperability Workshop, Orlando, FL, 2011

[23] Remmersmann, T., U. Schade, L. Khimeche, and B. Gautrau, "Lessons Recognized: How to Combined BML and MSDL," IEEE Spring Simulation Interoperability Workshop, Orlando, FL, 2012

[24] Simulation Interoperability Standards Organization, *Standard for: Military Scenario Definition Language (MSDL)* http://www.sisostds.org/DigitalLibrary.aspx? Command=Core_Download&EntryId =30830

[25] IBM ILOG JViews Maps for Defence V8.7, *http://publib.boulder.ibm.com/infocenter/jviewmap/v8r7/topic/com.ibm.ilog.jviews.defense.doc/Content/Visualization/Documentation/JViews/JViews_Defense/_pubskel/ps_usrprgdef792.html*

[26] Pullen, J. D. Corner, R. Wittman, A. Brook, O. Mevassvik, and A. Alstad, "MSDL and C-BML Working Together for NATO MSG-085," IEEE Spring Simulation Interoperability Workshop 2012, Orlando, FL

[27] McAndrews, P., L. Nicklas, and J. Pullen, "A Web-Based Coordination System for MSDL/C-BML Coalitions," IEEE Fall Simulation Interoperability Workshop, Orlando, FL, 2012