Multi-Schema and Multi-Server Advances for C2-Simulation Interoperation in MSG-085

Dr. Mark Pullen
Douglas Corner
GMU C4I Center

Dr. Robert Wittman
MITRE Corp.

Adam Brook
QinitiQ

Dr. Per Gustavsson
Saab AB

Dr. Ulrich Schade
Thomas Remmersmann
Fraunhofer-FKIE

Presentation Overview

- Introduction/overview
- NATO MSG and SISO
- Previous Server Systems and Clients
- Multi-Schema and Multi-Server Systems
- Conclusions

Generic BML Architecture

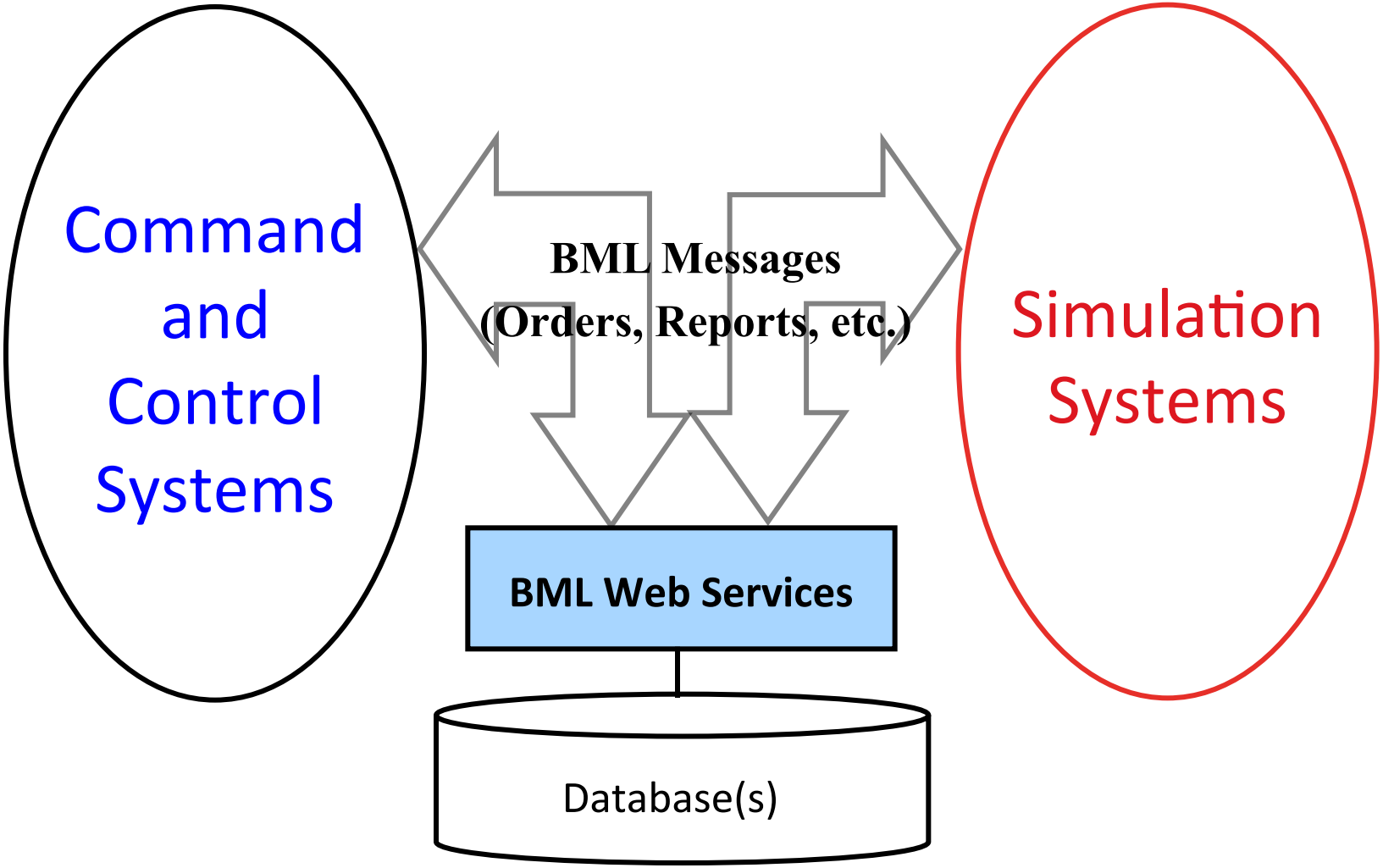

Introduction/Overview

- Overall goal: interoperation of Command and Control (C2) systems with simulations
- Server supports Battle Management Language (BML)
  - Stores XML formatted documents
  - Publishes them to subscribed clients
- Major components:
  - Military Scenario Definition Language (MSDL)
    - Initialization of simulation and C2 systems
  - Coalition Battle Management Language (C-BML)
    - Orders, Requests, and Reports among C2 systems / simulations
  - Building block: Task (who/what/when/where/why) + its status
- Focus of upcoming NATO MSG-085 final demo

Advances Bring New Problems

- Schema Divergence
  - Each generation of prototyping creates new schema
  - Schemata are semantically equivalent (or nearly so)
  - Client proponents prefer to invest effort in new capabilities, not changing old ones
  - Solution: translating server
- Need for distributed servers
  - Efficient client distribution
  - Increased performance
  - Flexible architecture

NATO MSG and SISO

BML in NATO
Modeling and Simulation Group

- MSG has been nexus for BML cooperation
- MSG-048 Technical Activity started 2007
  - Stimulated by US-France project 2006
  - Demonstrations at I/ITSEC 2007 and 2008
  - One-week experimentation 2009 (9 nations)
- MSG-085 Technical Activity started 2010
  - Goal: operational use of MSDL/C-BML (12 nations)
  - Planning demonstration Dec 2013
- Supports trial use of new concepts before standardization

MSG-048 2009 Architecture

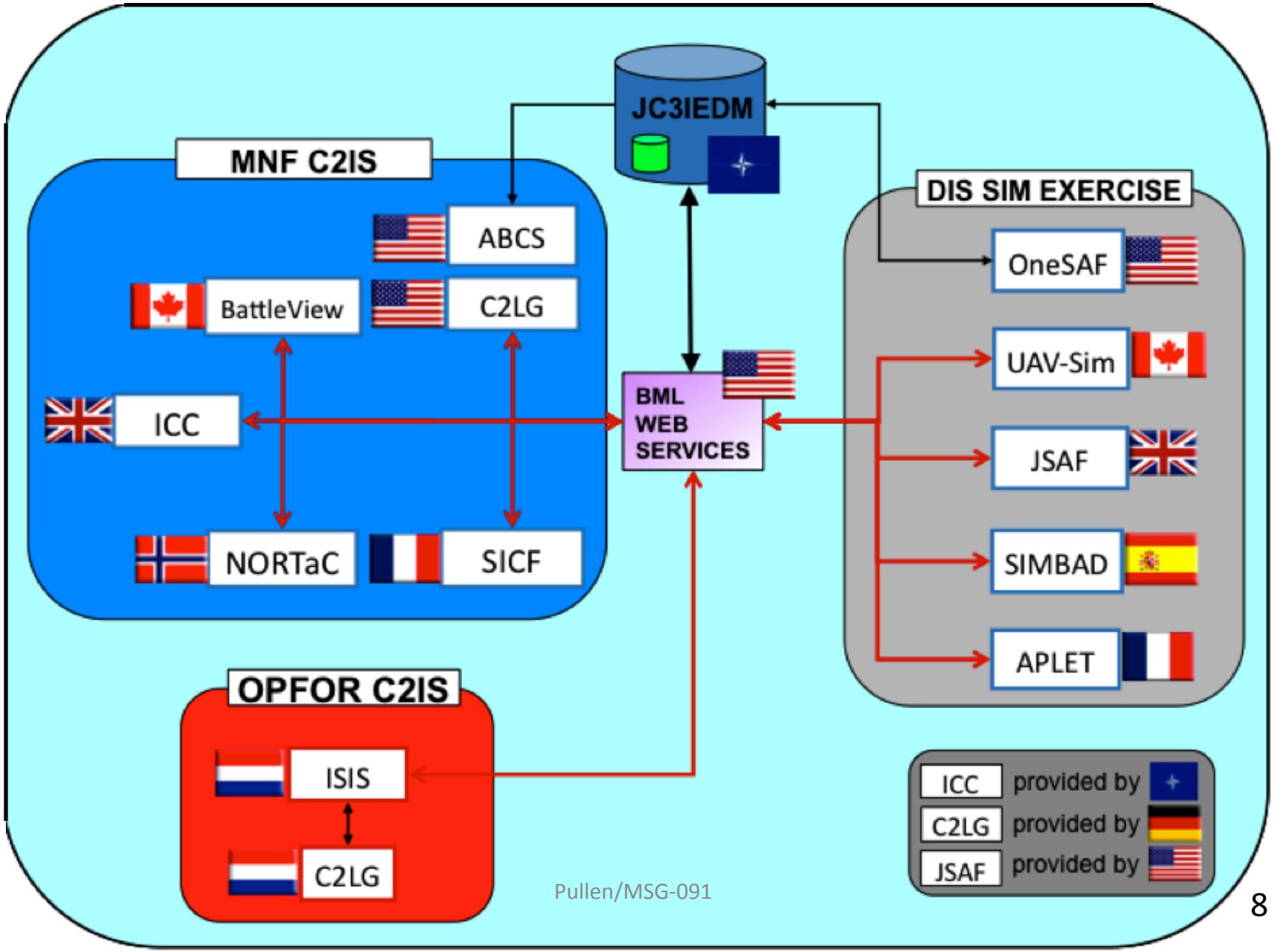

MSG-085 General Architecture

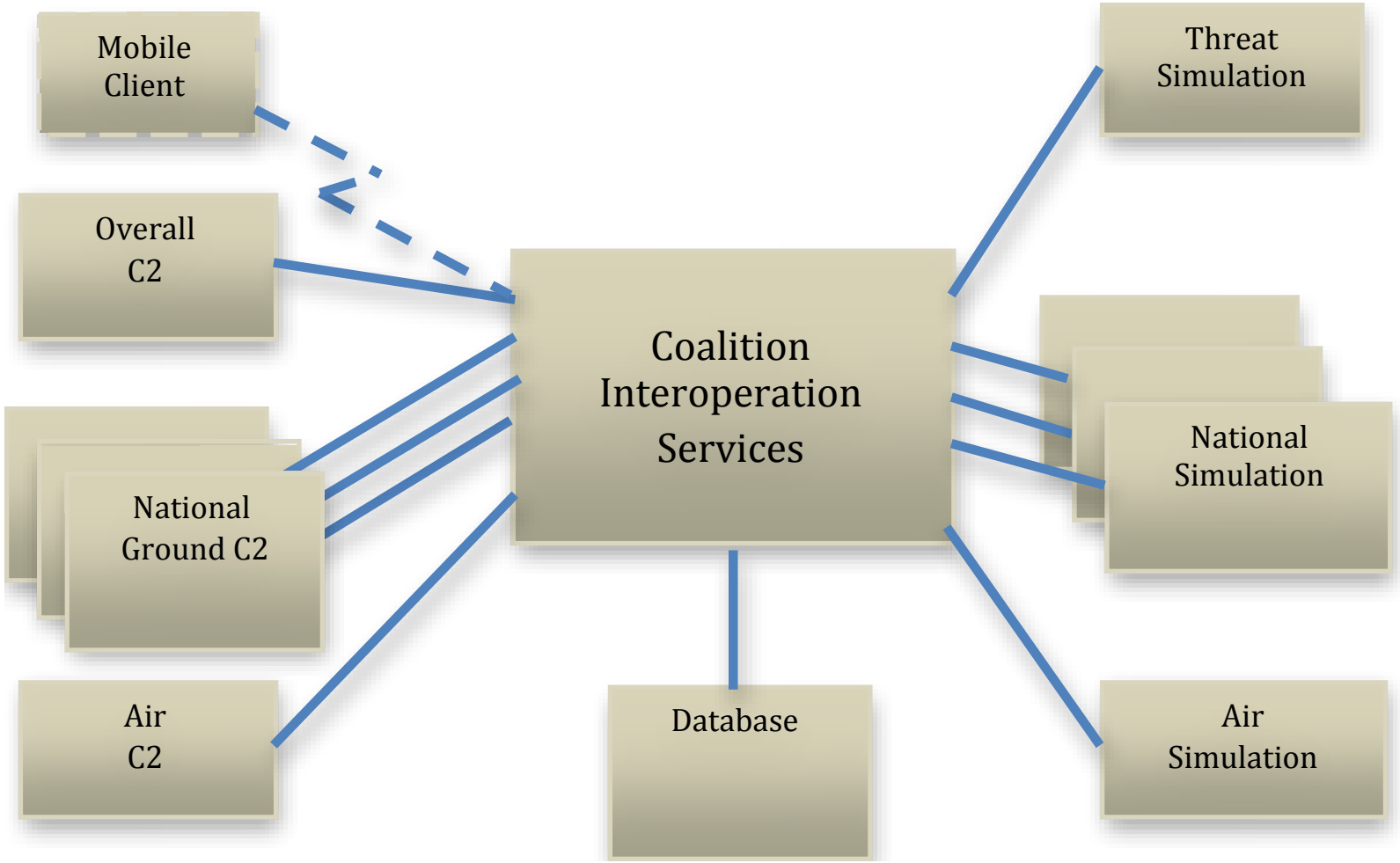

MSDL Background

- Grew out of need in US Army OneSAF program
  - Reduce scenario development time
  - Re-use resulting scenarios
- XML-based military scenario format
  - Designed for use by current and evolving simulations
  - Prototyped within OneSAF 2001-2004
  - Spawned SISO Study Group
  - Product Development Group chartered 2006
  - SISO MSDL v1.0 standard approved 2008

MSDL Initialization Data Components

- Geographic Region of Interest
- Force/Sides
- Units
- Equipment
- Installations
- Overlays
- Graphics
- Military Operations Other Than War

C-BML Background

- Purpose: provide a common, agreed-to format for exchange of Orders/Requests/Reports between C2 and simulation systems
- Implemented using a repository where participating systems post and retrieve XML documents
  - Extended to publish/subscribe for efficiency
- SISO study group 2005
- Product development group chartered 2007
  - Phase 1 Standard package balloted 2012
  - "Full" schema includes "Light" subschema
- Development informed by NATO Technical Activities MSG-048 and MSG-085

C-BML XML Documents

- Orders: provide a collection of tasks in a common framework
  - Who/what/when/where/why in tasking grammar
  - Initial orders and later fragmentary orders (FRAGO)
  - Low data rate
- Reports: provide data for situational awareness
  - Much higher data rate
  - Typically units report about once per minute

MSG-085 Mission Statement

*"Assess the **operational relevance** of *C-BML while contributing to C2-Simulation standardization and assist in increasing the **Technical Readiness Level** of *C-BML technology to a level consistent with **operational employment** by stakeholders."*

**Including the complementary use of MSDL for initialization*

MSG-085 Infrastructure Common Interest Group I/ITSEC 2012 Air-land Vignette: Sweden, UK & USA

Operational Thread and Capability Demonstrated

- Recce-focused integrated Air-Land vignette using BOGALAND Scenario
  - Ground force Recce cues UAV and fast jet CAS mission
  - Insertion of troops by helicopter
- Enables mission planning, C2 training, and mission rehearsal

Technical Capability

- MSDL/C-BML Infrastructure Information
- MSDL Toolset/Population Mechanism for Preparation and Initialization
- Aggregated MSDL initializes systems
- Scripted BML Server v2.5 bridges multiple schema versions
  - IBML(MSG-048) & SISO C-BML-Light
- Use of WISE Server (SAAB) linked through SBML server and populating 9Land BMS (Swedish C2 system)
- Use of ESRI Track server for Visualization
- Operational C2 systems; ICC and JADOCS integrated JSAF and OneSAF
- WAN-based system

MSG-085 JTF Mission Rehearsal

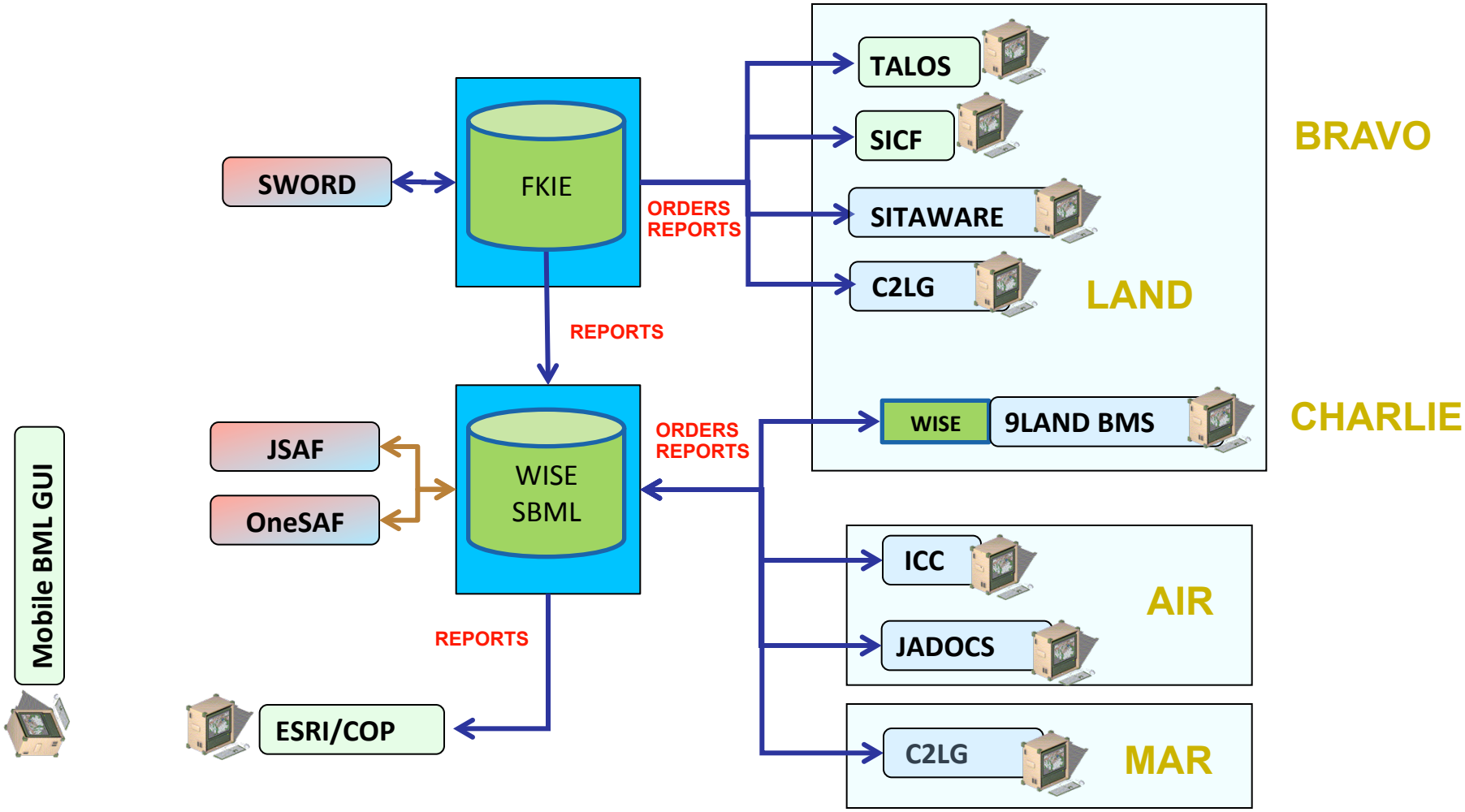

Previous Server Systems and Clients

Scripted BML (SBML) Server

- Created during MSG-048 as open source solution to asynchronous exchange of BML documents (Orders and Reports)
  - Scripted approach allows rapid reconfiguration and reduces errors
- Matured to have a number of features
  - Most important is ability to translate among schemas with same semantic content
- GMU runs a server accessible via Internet
  - Under OpenVPN to avoid hacking
- Demonstrated supporting 10 documents per second
  - Performance reduced under translating feature
- Will remain available open source

SBML Architecture

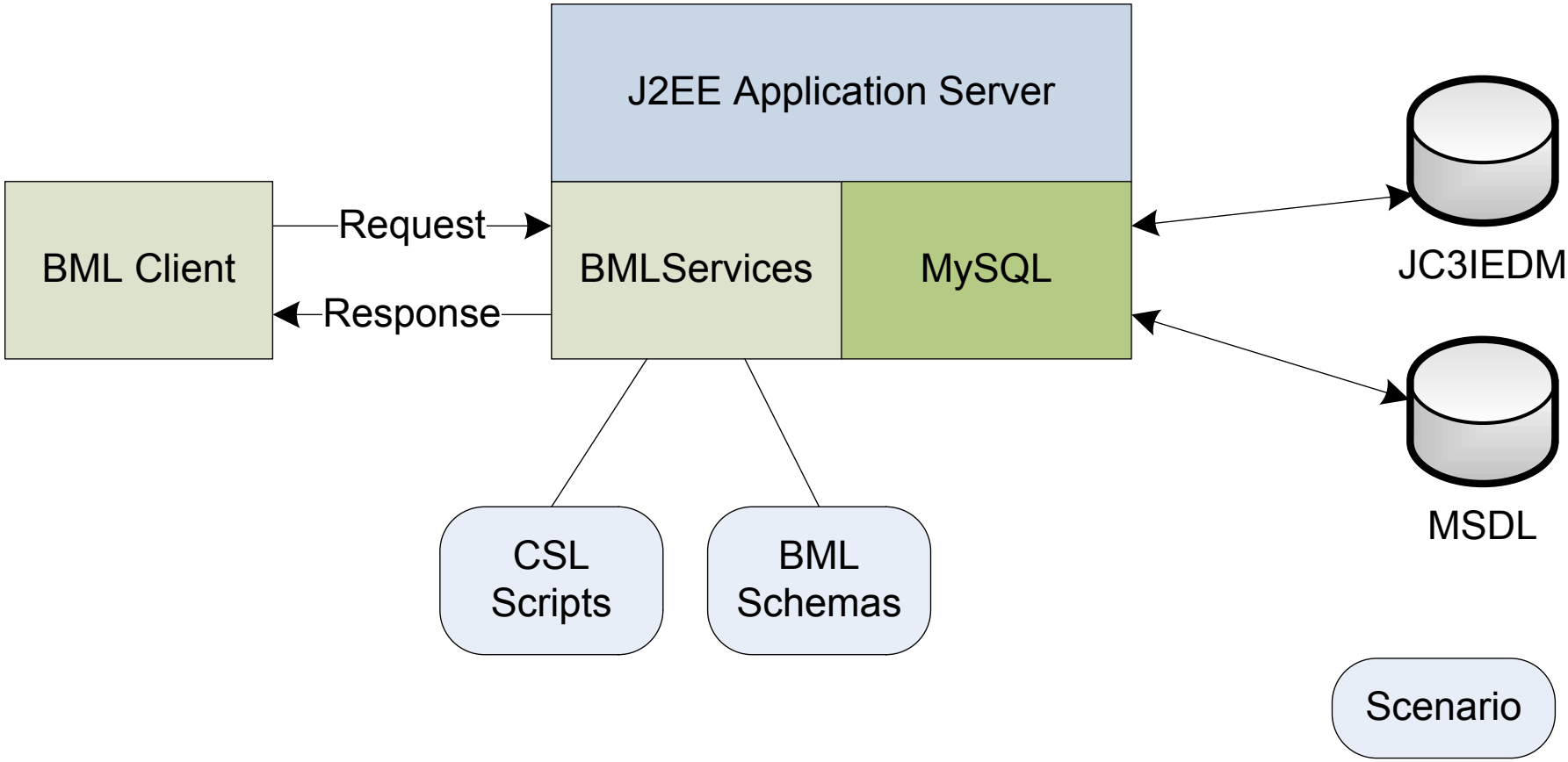

FKIE BML Server

- Developed as simpler alternative to SBML
  - Simple and fast
  - Retained capability to modify schema
- Input distributed over messaging service
  - Stored in file system for later requests
- XML is not changed or validated by server
  - Limited parsing to extract message type and ID

OneSAF Enhancements for MSDL/C-BML

- MSDL document validation
- Enhanced 2525B symbol code use
- Imports C-BML Full and Light Orders
- Exports C-BML Full and Light Orders from OneSAF Mission Editor
- Works with GMU Coalition Status Monitor
- Send and receive MSDL/C-BML from VMASC CBMS
- References C-BML documents within MSDL files
- Cross-references units and equipment tasking between MSDL and C-BML documents

MSDL Reference Design Pattern

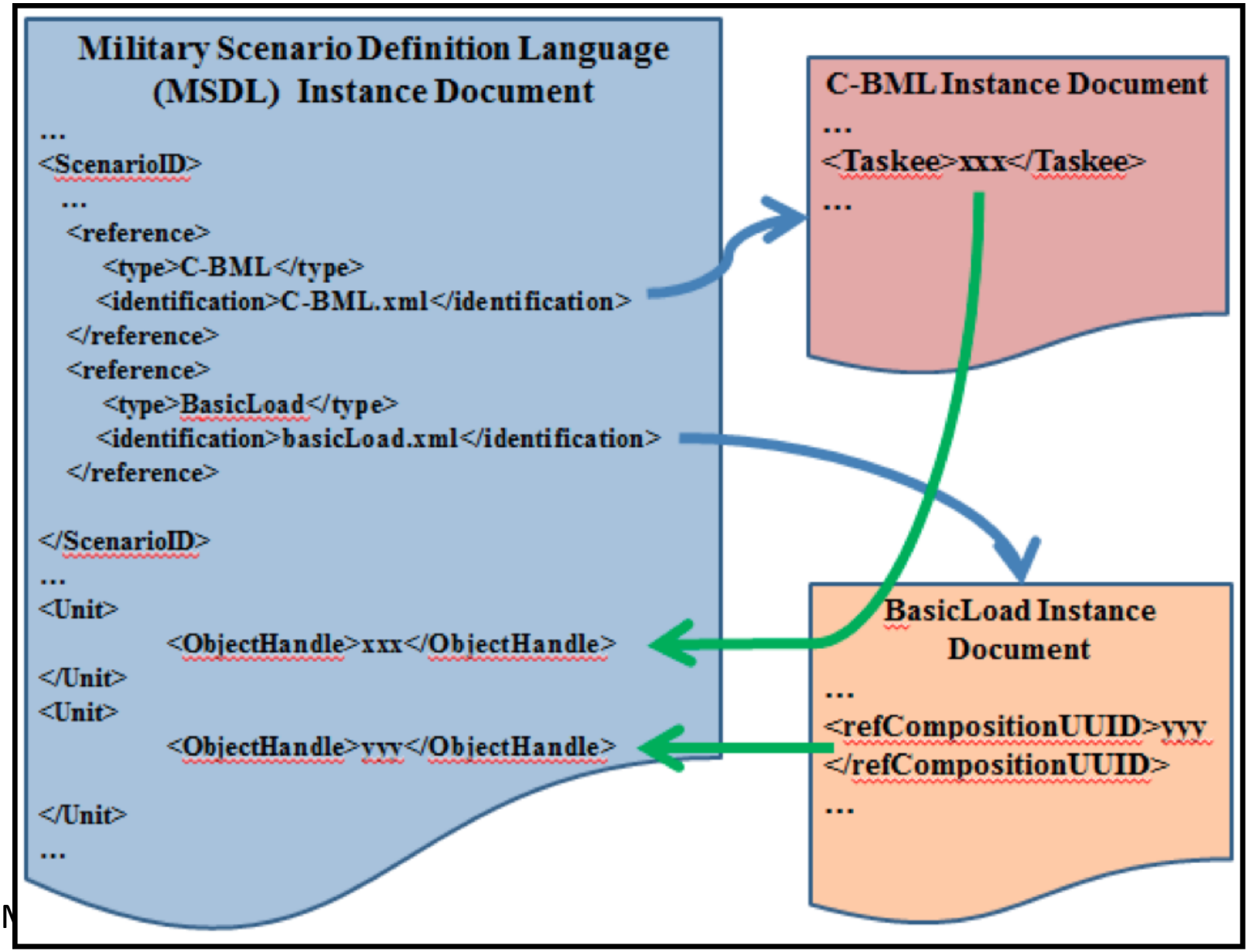

Air Operation Systems

- Integrated and operated by QinetiQ/UK
- NATO Integrated Command and Control System (ICC)
  - Air component C2
- Joint Automated Deep Coordination System (JADOCS)
  - Joint battlespace C2 (linked to MSDL)
- JSAF entity level constructive simulation
  - Air simulation and perceived truth sensor
- Use IBML09 schema from MSG-048

Generic Architecture for Air Operations

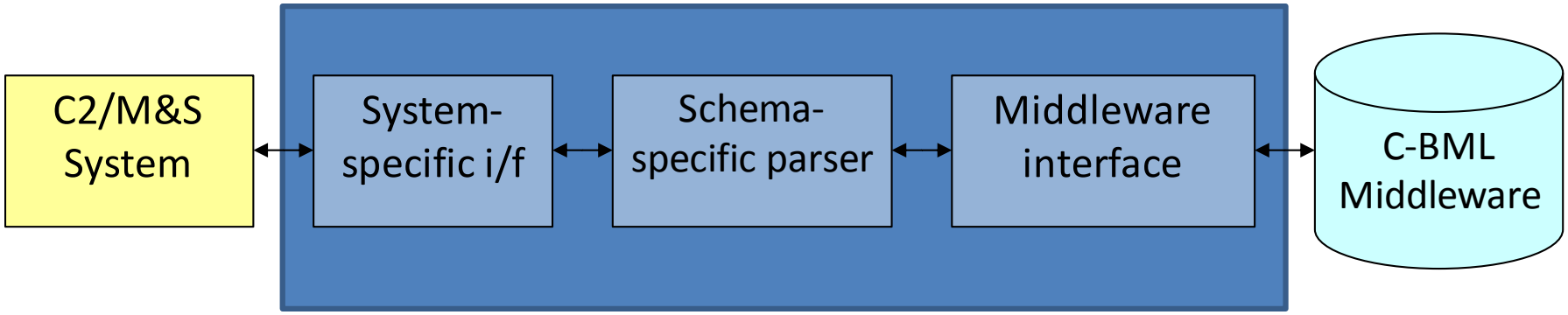

Evolving SBML to Commercial Infrastructure

- Scripting offers great flexibility
- Open source helps seed BML community growth
- But high-performance, industrially sustained infrastructure is needed for operational use of MSDL/C-BML
- GMU C4I Center and Saab are working together to achieve this

Saab WISE

- Widely Integrated Systems Environment is a Saab commercial product
  - Aimed at integrating information services (e.g.C2)
- Essentially a very high performance in-memory (non-persistent) database
  - Suitable for cloud environment
- Features a graphic scheme for programming information flows
  - Fills same role as scripting but easier/faster to use
- Saab has offered use of WISE to MSG-085 for use in experimentation

WISE
MSDL/C-BML SUPPORT

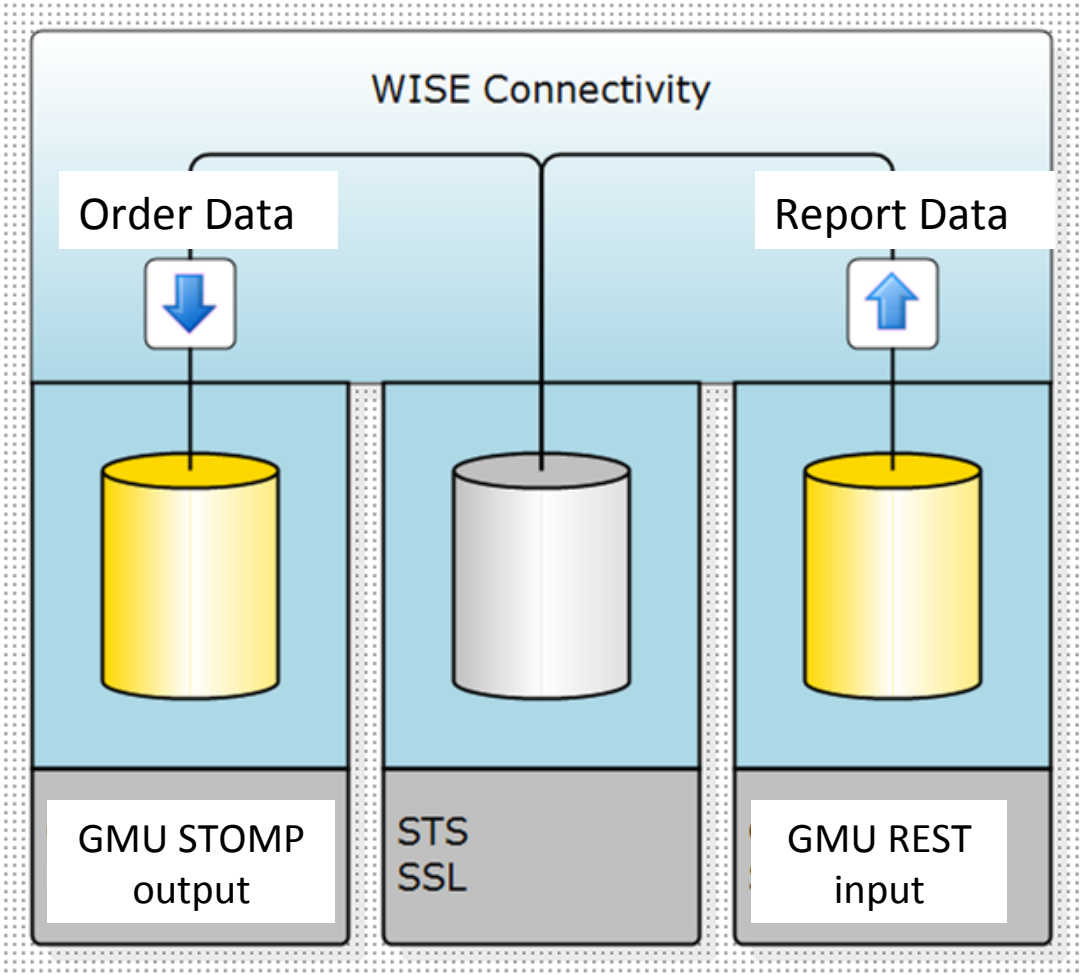

Multi-Schema and Multi-Server Systems

WISE-SBML Architecture

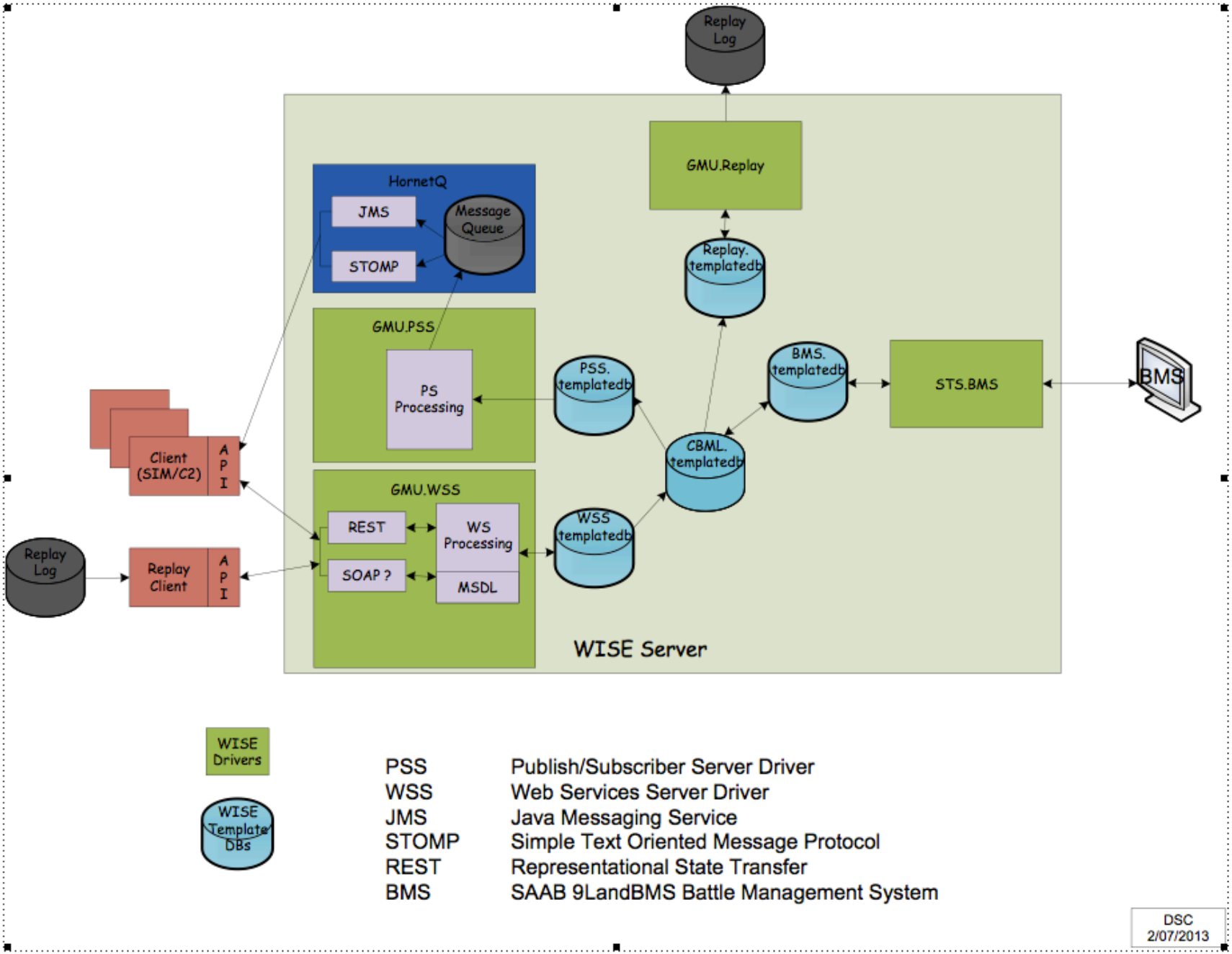

WISE-SBML

- Saab is supporting GMU fundamental research to show how to use WISE as BML server
  - Open publication and open source components to use with WISE
- GMU has completed prototype high-performance translating server
  - IBML/C-BML with MSDL, like previous SBML
  - MSG-085 CIG Land Ops
  - C-BML Light and compatible C-BML Full
  - Also unparsed/document mode
  - Logging/replay usable to provide persistence
    - (e.g. restart coalition from some point)
- Saab intends to productize this capability
  - Quality assurance and maintenance by Saab developers
  - Will make non-production WISE-SBML server available to developers on no-cost license
  - Also no-cost evaluation license for production
- GMU runs an instance on Internet over OpenVPN

WISE-SBML Processing Steps

- Steps in development:
  - Build input WISE Driver with parser per schema
    - Parses XML and stores elements in WISE database
  - Build output WISE Driver with XML generator per schema to publish
    - Also include support for directly interfaced systems
  - Build a WISE Driver for persistent recording
  - Edit the information flows using WISE editor
- Driver steps:
  - Input: parsing XML and loading database
  - Output: reading database, generating alternative schema XML, and publishing

WISE-SBML Processing

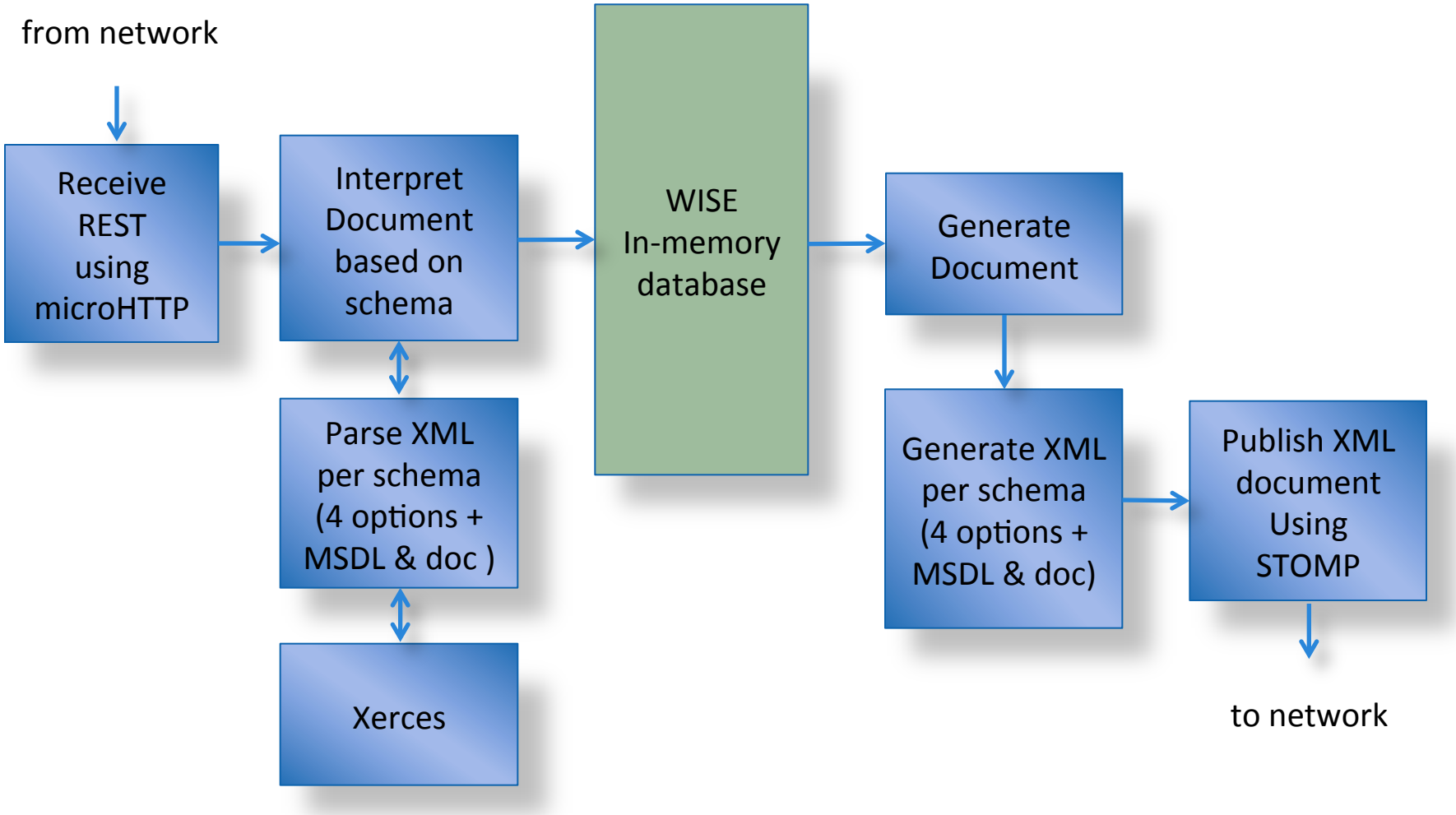

WISE-SBML Architecture – Direct Connection

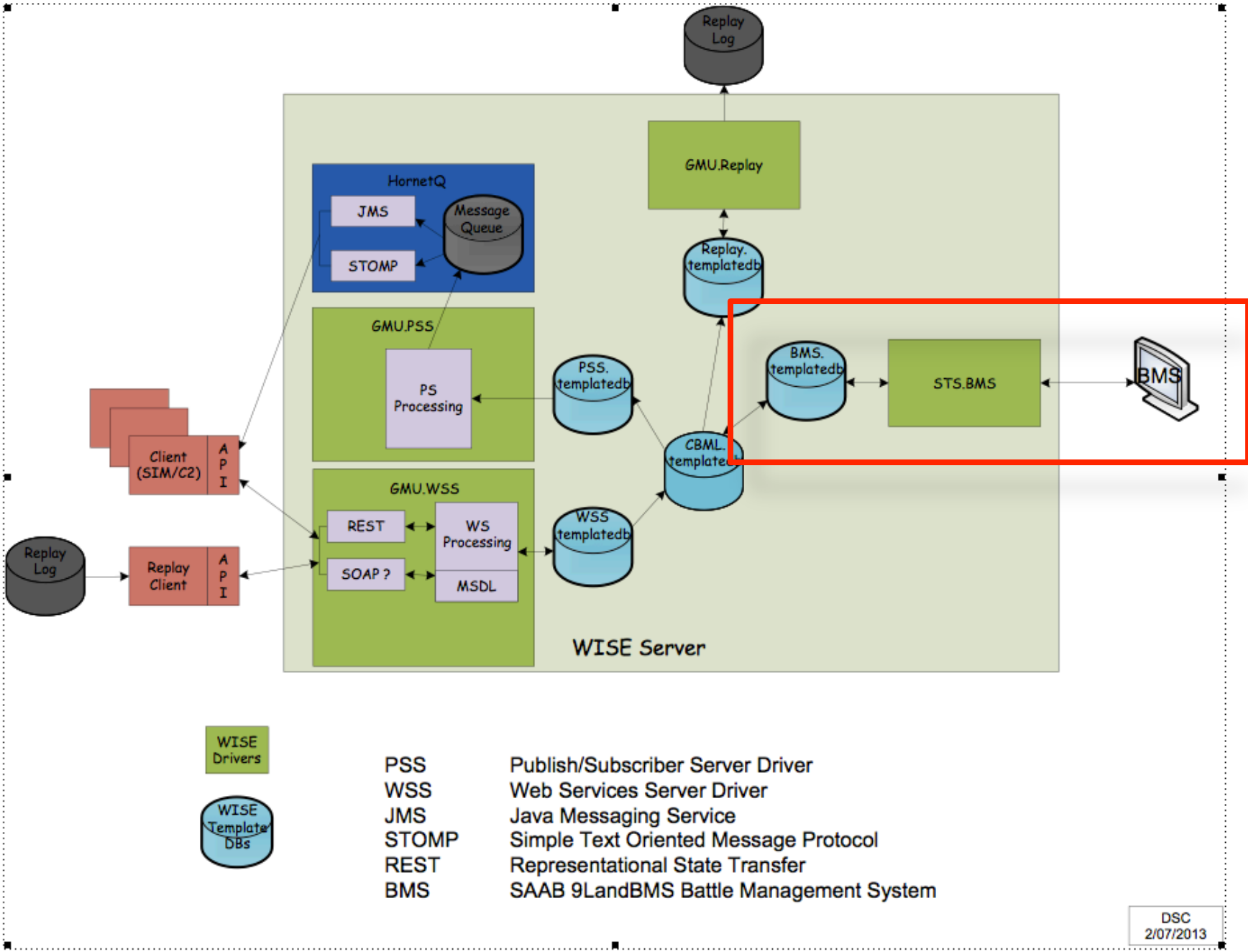

Directly Interfaced C2 System: 9LandBMS

- Battalion/Brigade level operational/commercial C2 system
- Used by Swedish forces
- Runs on Windows platform
- Touch interface for field use (wearing gloves)
- Offered to MSG-085 for experimental use
- WISE interface available
  - Used to provide C-BML interface

9LAND BMS
WISE SUPPORTED MSDL/C-BML

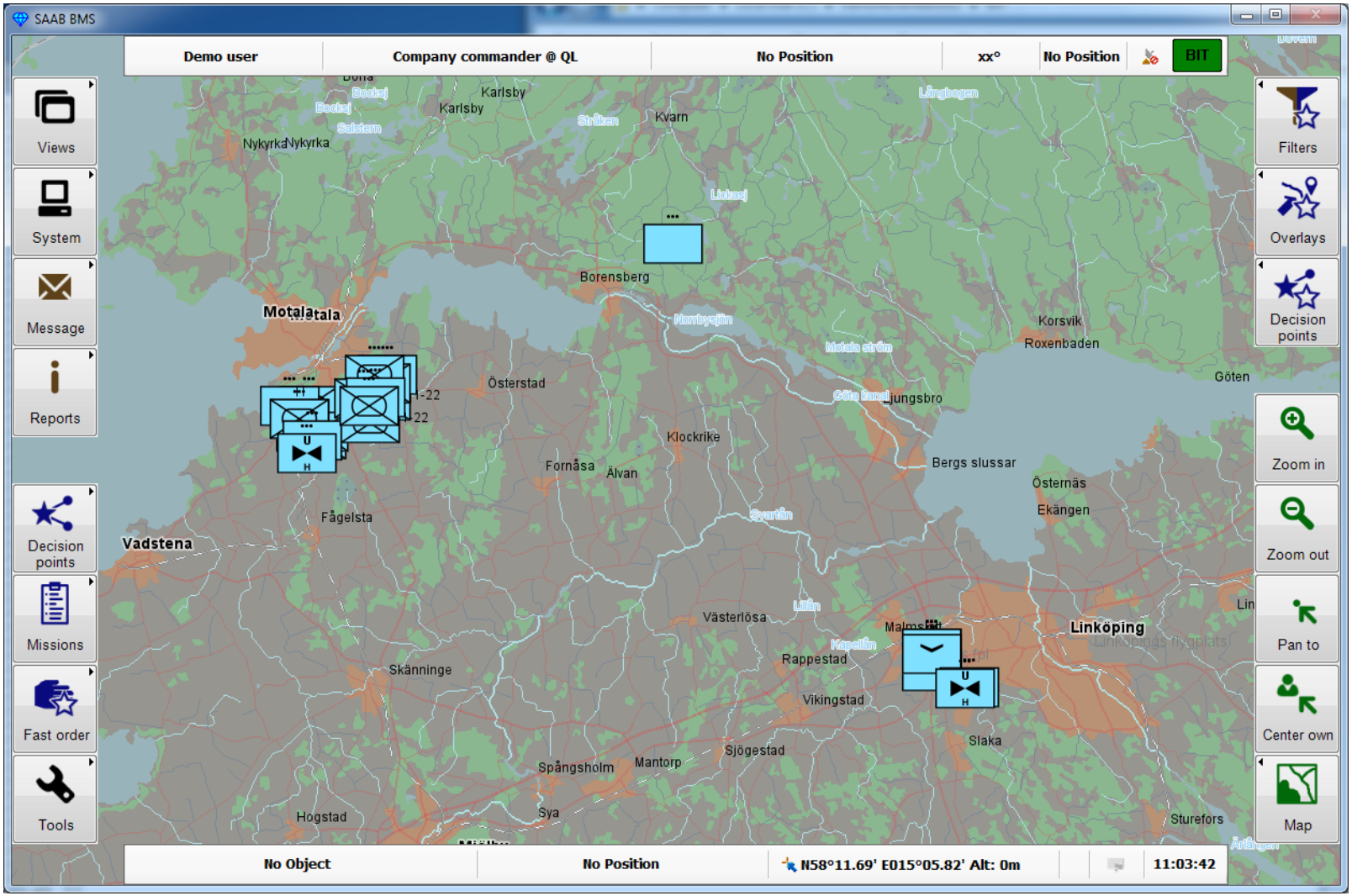

Multi-Schema and Multi-Server

MSG-111 paper 4

Adapting SBML to Support MSDL

- When multiple systems participate in a coalition their MSDL files must be merged
- Previously this has been done by hand
- GMU C4I team created a script to do it
  - Required one new script primitive
- Participating systems submit their MSDL prior to initialization
- Server merges it and publishes on command

MSDL Server Operation

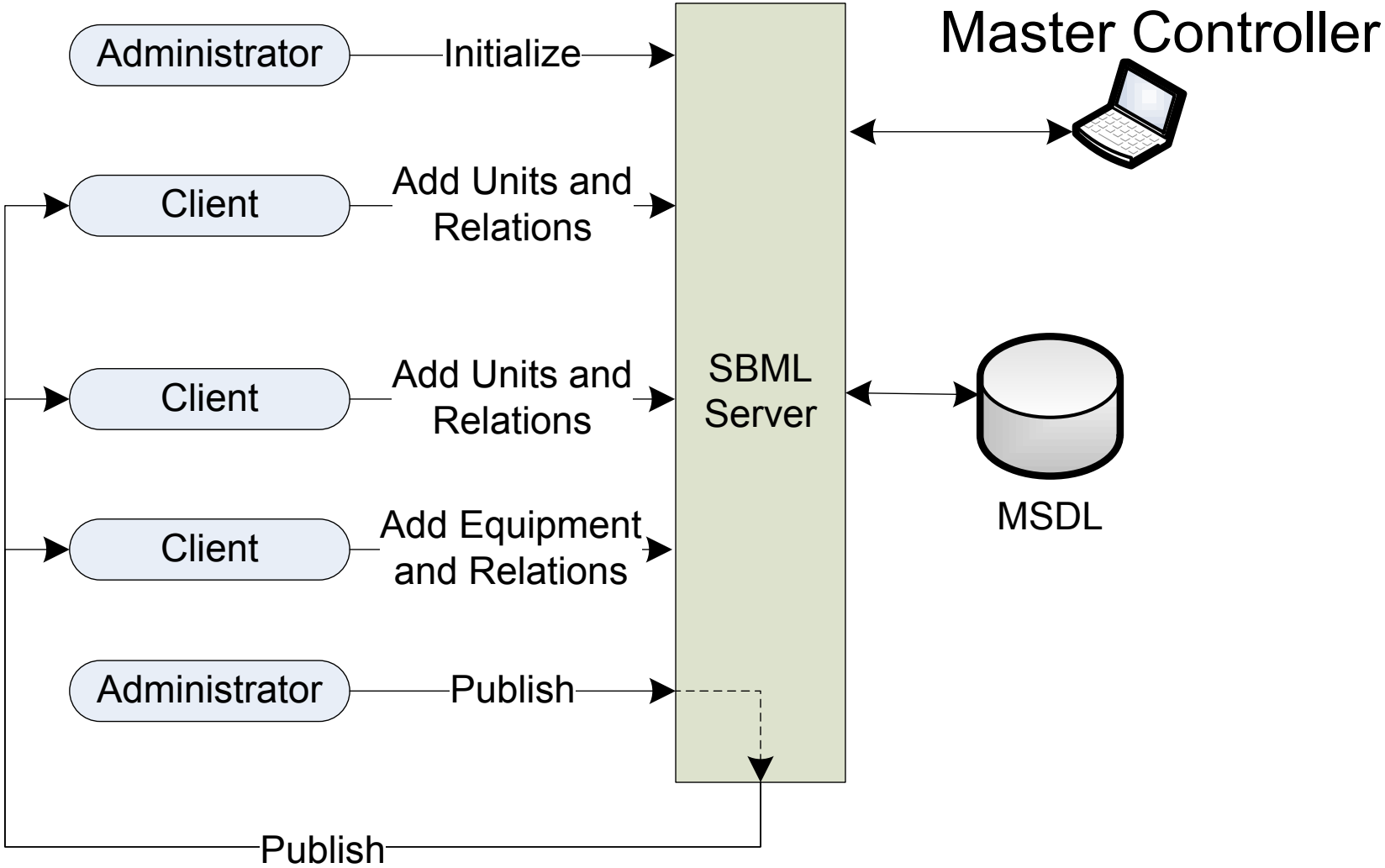

Continued Progress In MSDL + C-BML

Common industry standard-based scenario data:

- Enables rapid development
  - Compliant import/export/merge tools
- Encourages ID and tracking of scenario development among slice providers
- Extends use of widely available spreadsheet and XML tools
- Supports data element extensions
- Key capability: cross-linked MSDL and C-BML
  - See 13S-SIW-039

WISE-SBML for MSG-085

- WISE-SBML will enable MSG-085 to interoperate all Common Interest Groups using data with shared semantics
  - Regardless of what schema they have implemented
  - Performance projected to be ~100 documents/second
- The hard part of development is done
  - Initial testing complete for three schema to be used
  - Completed work with Fraunhofer-FKIE to link servers
    - See 13F-SIW-024
- Saab also will make WISE-enabled 9LandBMS C2 system available for MSG-085 experimentation

Generic BML Architecture

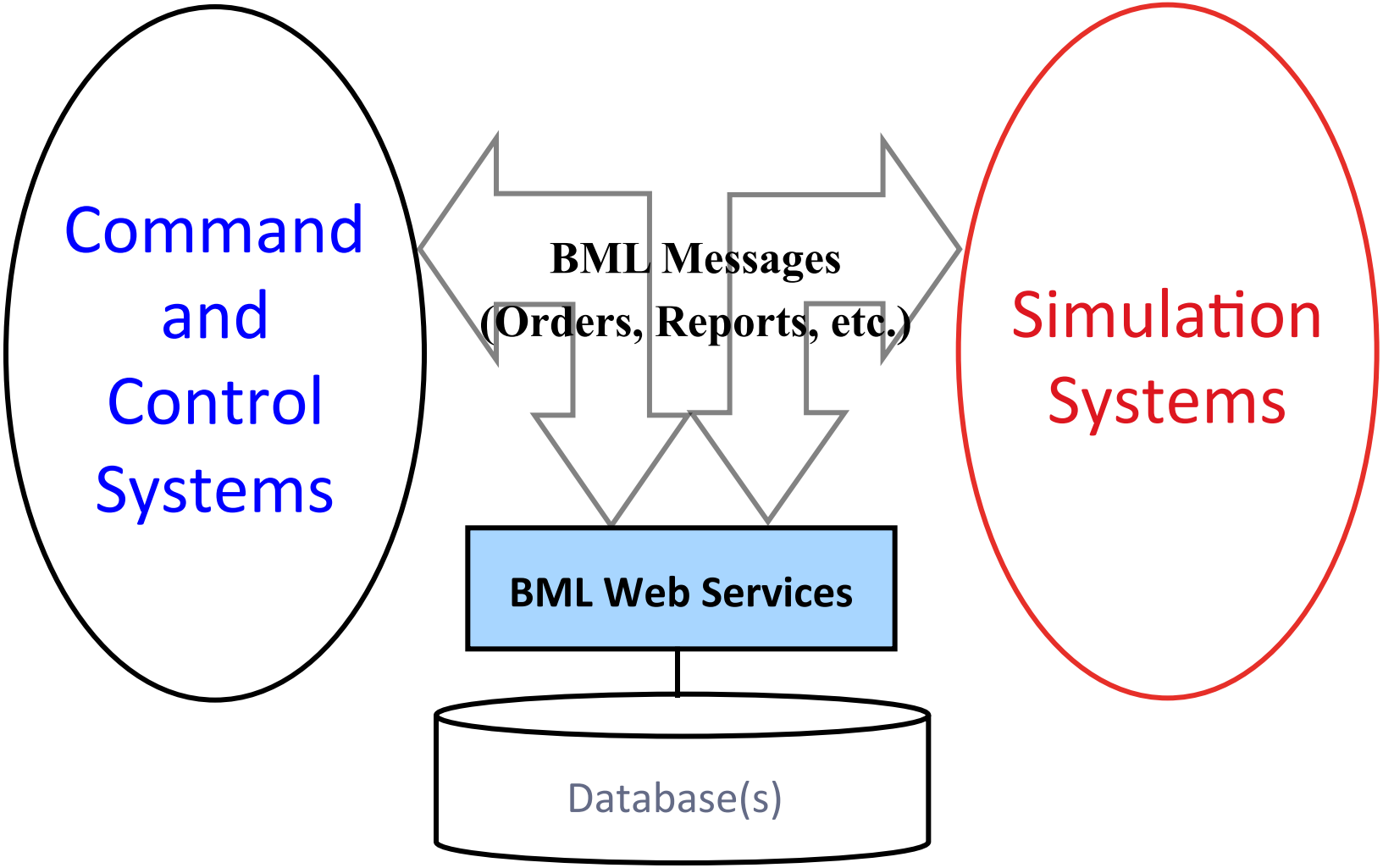

Distributed BML Servers

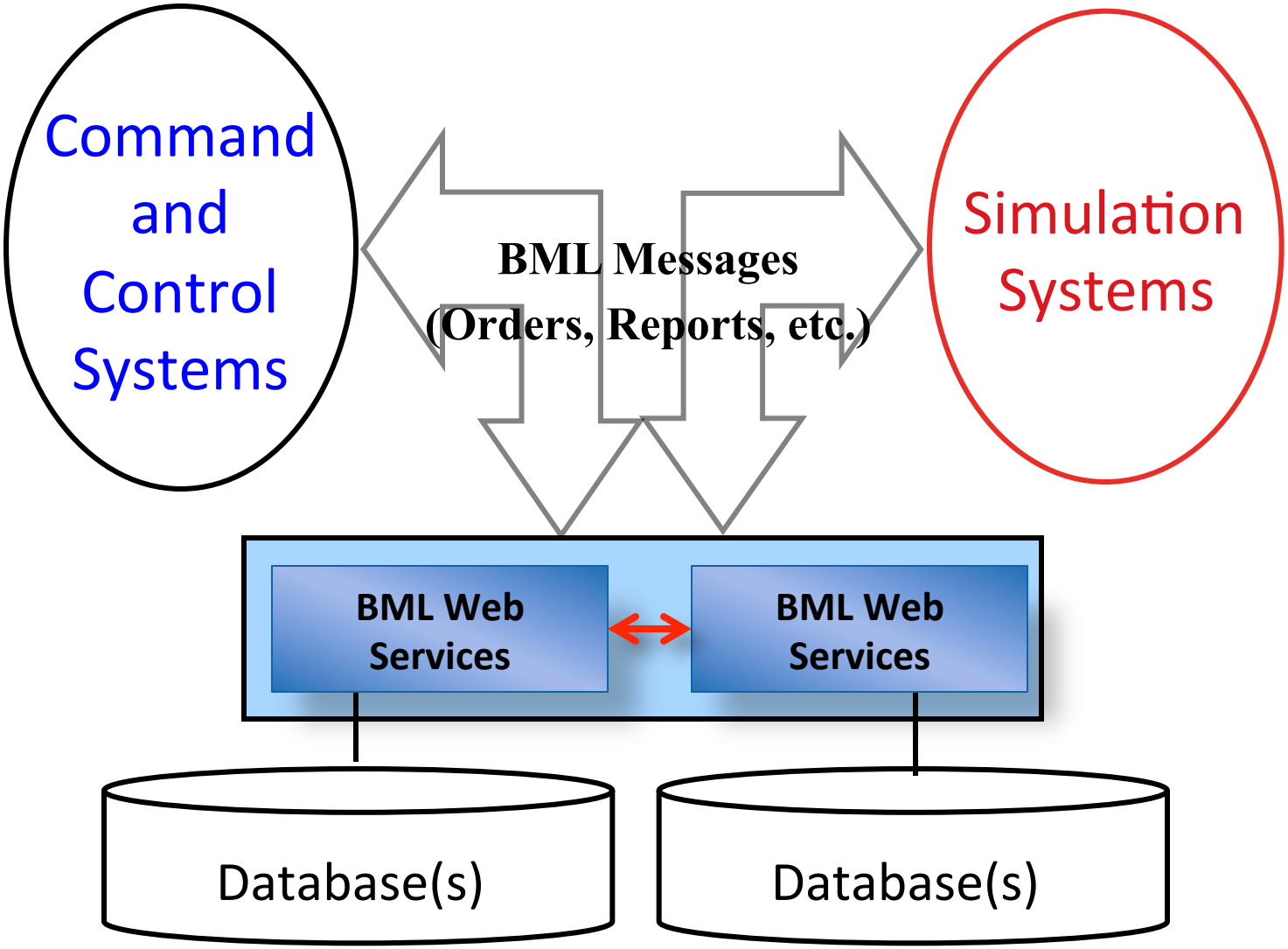

MSG-085 JTF Mission Rehearsal

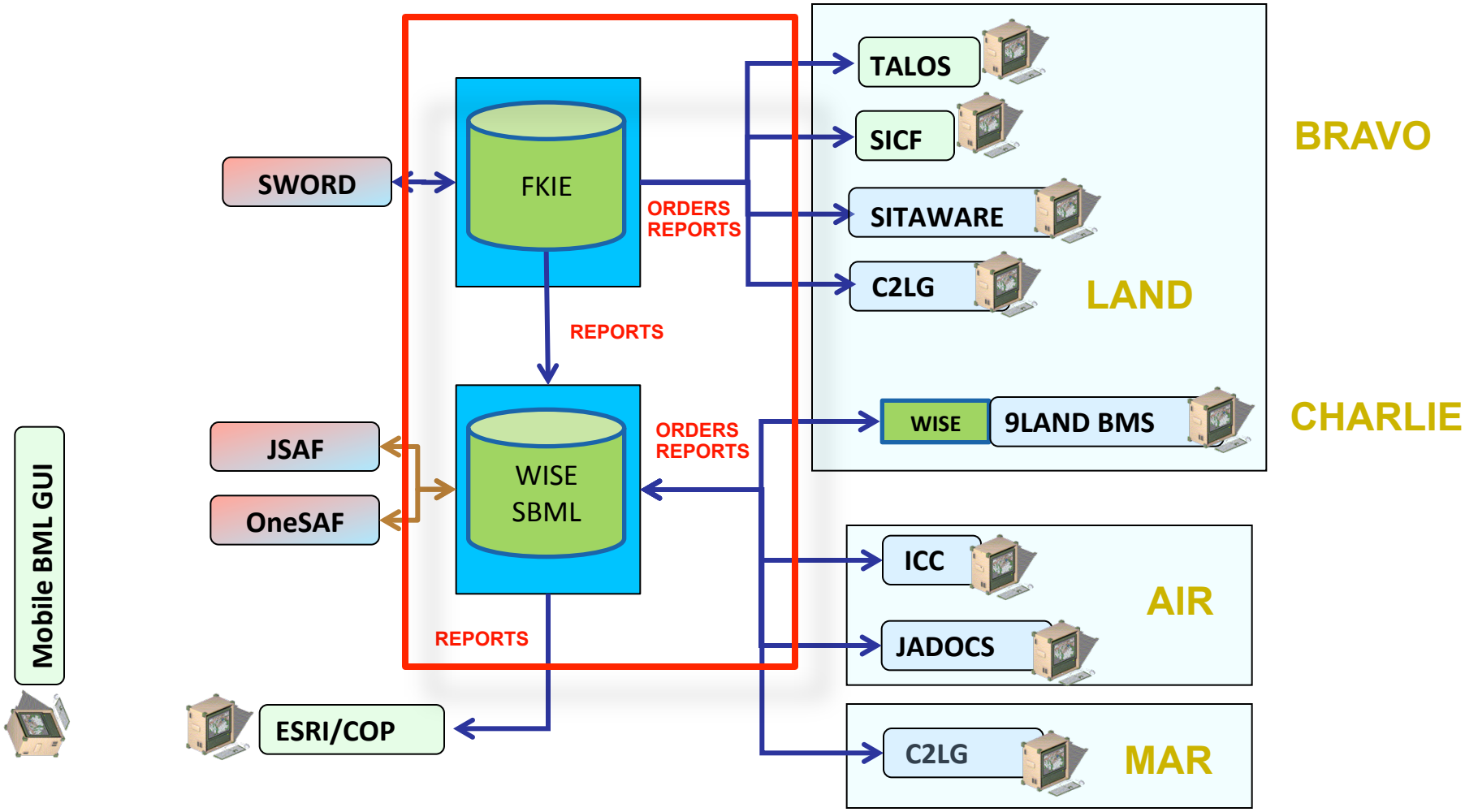

Multi-Schema and Multi-Server

MSG-111 paper 4

MSG-085 Linked Server Architecture

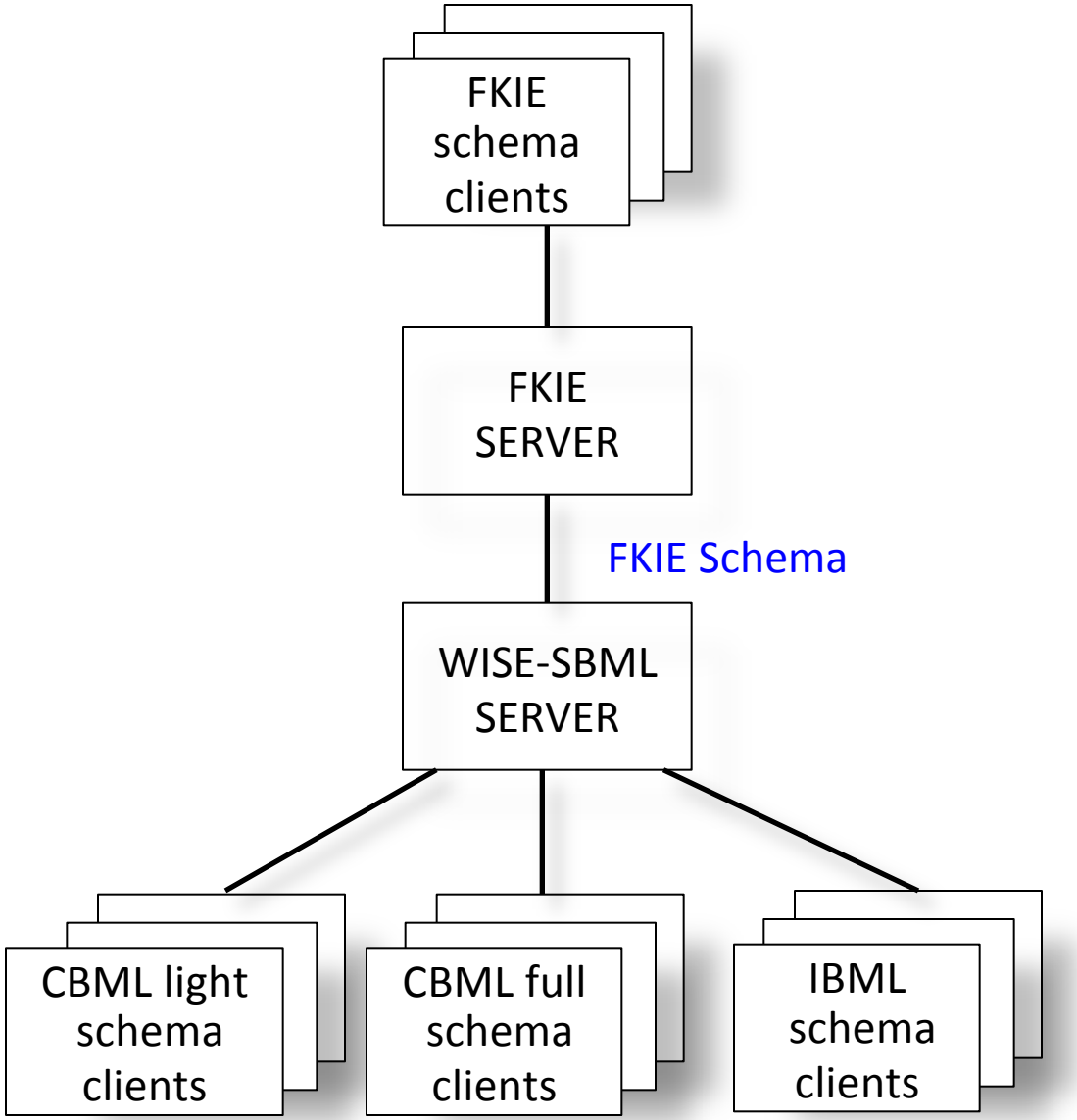

FKIE BML Server Options Supported

- Currently, supports:
  - IBML (MSG-048 schema)
  - SISO C-BML Phase 1
  - MSG-085 CIG Land Ops
  - MSDL for initialization
- No schema conversion in server
  - All clients must agree on one schema
- Supports same message exchange protocols as SBML
  - Input: SOAP and REST
  - Publication: JMS and STOMP

Linking WISE-SBML and FKIE Servers

- Basis for linking servers:
  - Each listens to the other's STOMP publications
- Thus, server needs to implement client function
  - We did this in a separate Java client
  - Same client implements REST as input to own server
  - Filters based on first-forwarder IP address (parameter in REST header) so messages do not loop
    - Might also choose to filter out some schemata for efficiency
  - We call this a "back to back" (B2B) client
- B2B is started immediately after own server
  - Connects to the other server and starts forwarding

Server Linking Architecture

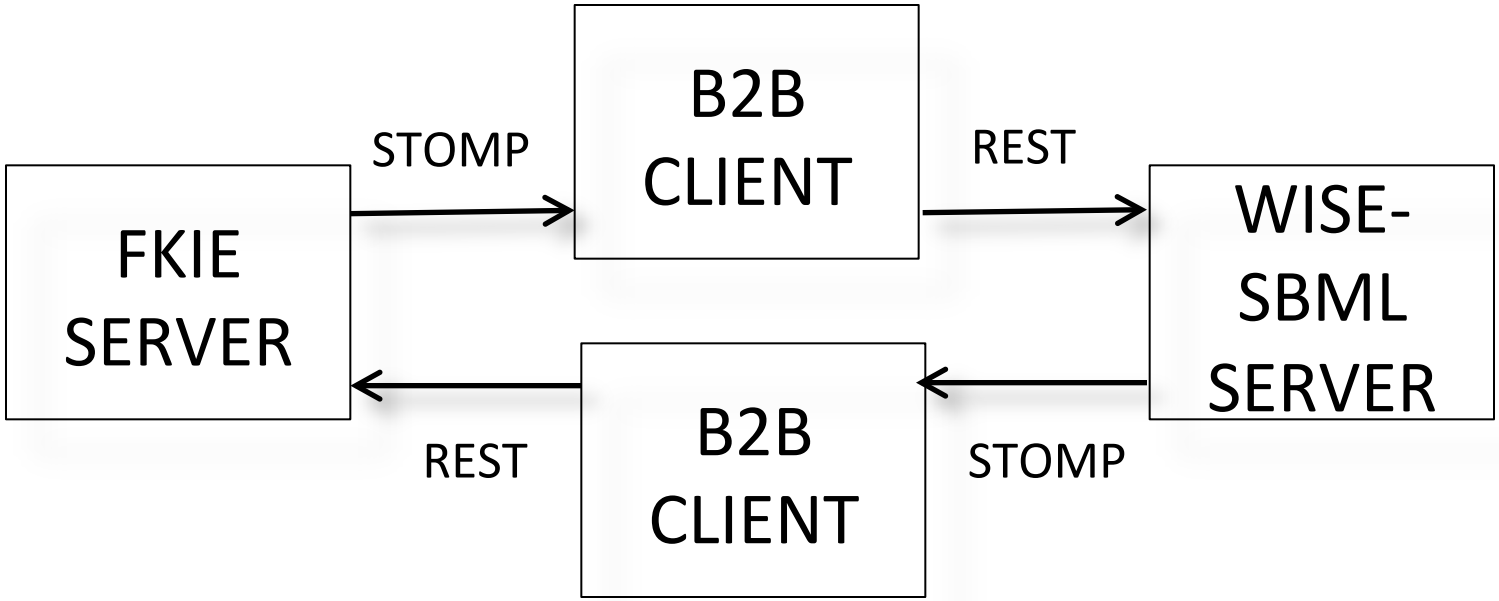

Limitation of Initial Linking Architecture

- Breaking loopback to first forwarder is essential
  - Without this, message would loop forever
- If more than two servers are linked, it becomes necessary to filter out *any* message that has already passed through this server
  - So the simple first forwarder test is insufficient
  - This would require including address of every forwarding server in the message header
  - Or configuring routing information in B2B

Conclusions

- MSG-085 continues to be a driving force for development of SISO standards
  - Final demonstration planned for 2013
  - Defined path to MSDL/C-BML convergence
- Development process has resulted in multiple, semantically-compatible schemata
  - Translating server using high-performance platform enables interoperation
- Also developed first example of linked heterogeneous servers
  - Improved efficiency/performance/flexibility
- Evolution of BML is likely to result in repeat of this pattern

QUESTIONS?